SERVICE MANUEL
WHITE POWER

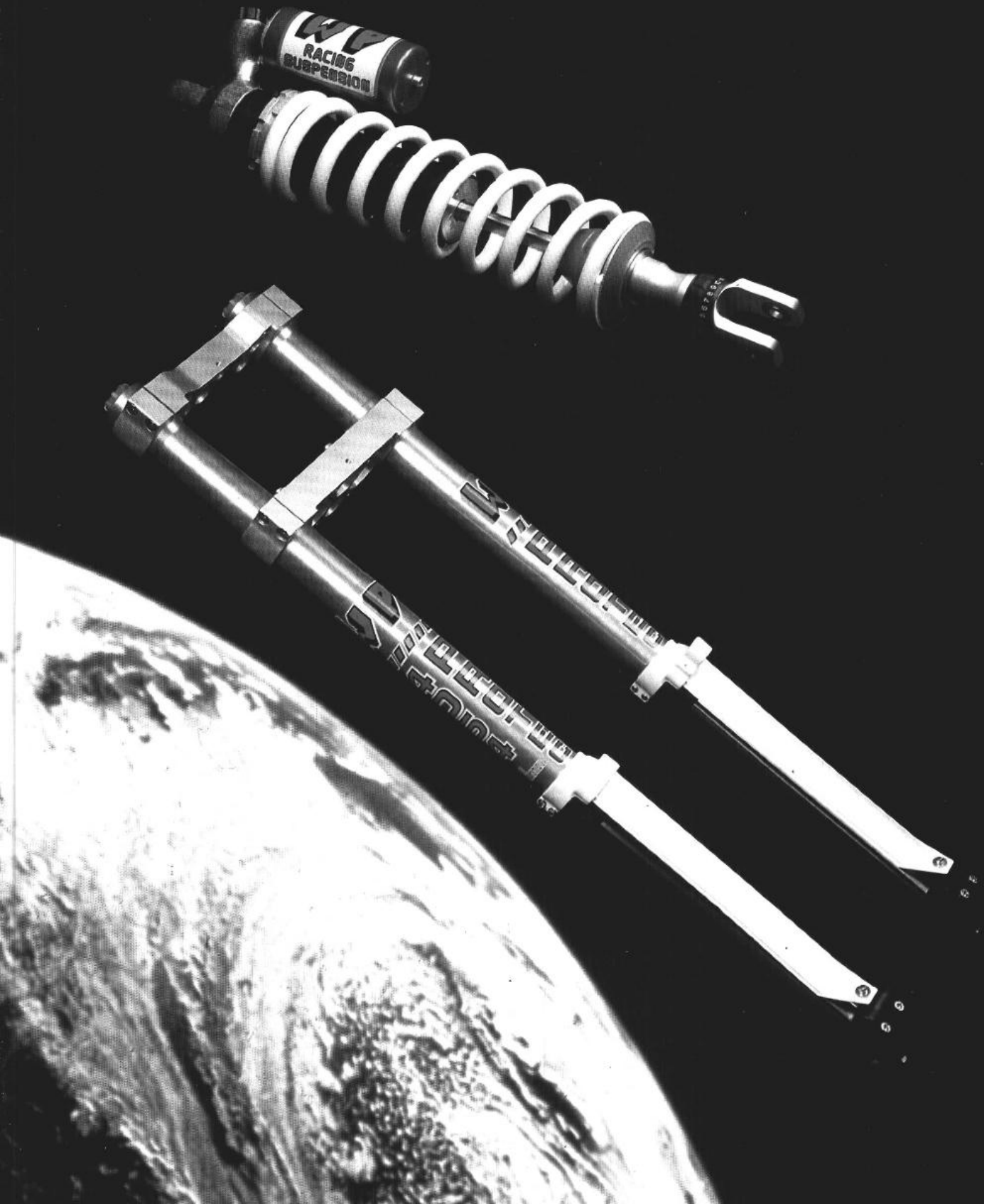

MX SUSPENSION SET UP GUIDE

As the owner of a mx bike fitted with White Power suspension components, you are in possession of the world's most advanced suspension products. The new WP shocks and Upside-Down front forks have been developed in close cooperation with factory teams and the world's best riders during the world championships. The WP shocks and front forks are based on a new design, which sets new standards for adjustability and fade-free performance. This combination has already brought countless Grand Prix victories and world championships to users of WP products. Now you, too, can benefit from these handmade shock absorbers and front forks. They are externally adjustable over a wide range of compression and rebound damping settings, as well as offering easy preload and ride height setting adjustments. A wide range of variable rate springs are also available, to ensure that the White Power components can be matched to any rider's ability and type of circuit.

This manual is intended to help the rider with maintenance and to determine the adjustment which suits him best. Although it is highly likely that you will be completely satisfied with the damping performance of your shock and fork as supplied, many riders will be interested in the possibility of tuning them to perfection for their own particular preferences. "Perfect" damping control is just as important as fine-tuning your engine when it comes to cutting precious seconds off your lap times. Due to the extremely close tolerances, the suspension components should be run in for approximately 1 hour before beginning fine adjustments.

TABLE OF CONTENTS

ADJUSTING THE REAR RIDE HEIGHT SAG

Adjustment of the Rear Ride Height Sag is very important for finding the correct starting point for any suspension tuning. It helps the rider to determine the correct spring preload adjustment and spring rate selection for his specific needs. The spring preload, as well as its affect on the rear wheel, also affects the overall behaviour of the motorcycle, due to its effect on the rake of the front fork. Due to the high absorption qualities of the bump rubber, it is not always apparent when the rear suspension is bottoming out. Many riders might think that the damping is too harsh, when in fact they are running too little preload, or a spring rate which is too low, and are using only about the last third of the stroke. Setting the Rear Ride Height Sag according to these guidelines will ensure correct adjustment and spring rate selection.

When carrying out this adjustment procedure, the bike should be at its normal riding weight, with fuel, transmission oil and coolant all at the correct levels; the rider should be wearing his regular riding gear - boots, helmet and protective clothing.

Prior to adjusting the Rear Ride Height Sag, ensure that the rear suspension linkage moves freely and is not binding. Binding is indicated when, on lifting or depressing the rear of the bike, it fails to spring back. In this case, disassemble the swingarm and linkage, and clean and regrease all the bearings, using molybdenum disulphide grease. Recheck for binding after reassembling the machine.

Adjustment of the Rear Ride Height Sag is carried out as follows:

- Place the machine on a stand, with the rear wheel raised from the ground.
- Measure the distance from the rear axle to a fixed point near the rear of the seat (e.g. a seat or fender bolt) as illustrated in Fig. 1.

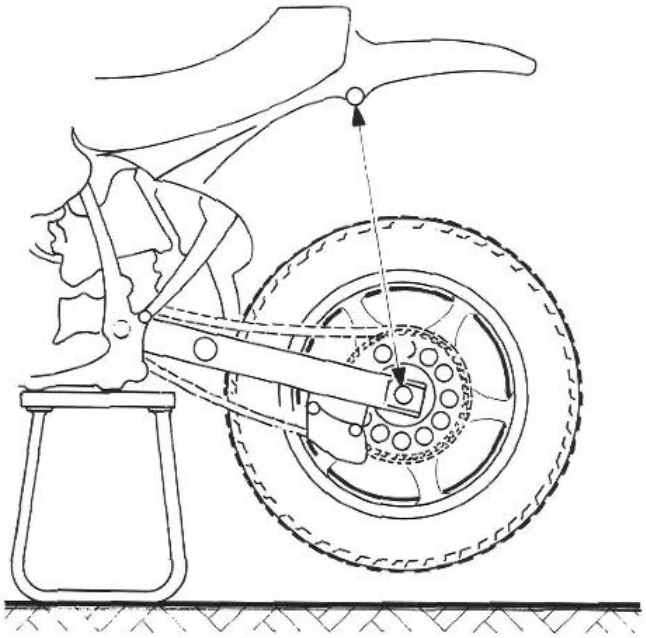

Fig. 1 unloaded measurement

- Remove the machine from the stand, so that both wheels are resting on the ground.
- With the assistance of a helper to hold the motorcycle upright, the rider should now sit on the machine in the normal riding position, with both feet on the foot-rests. The rider should now bounce on the seat to help the suspension overcome any stiction and allow it to settle to an accurate reference point.
- A second helper should now determine the loaded dimension between the same measurement points, as illustrated in Fig. 2.

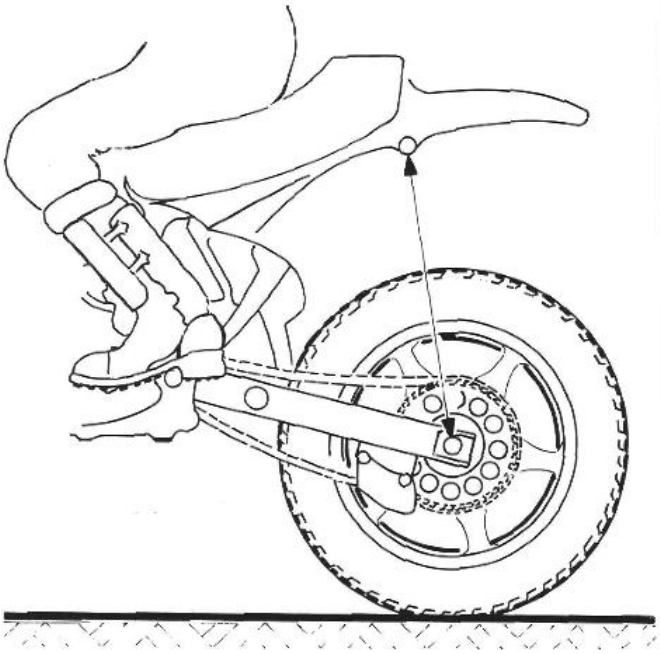

Fig. 2 loaded measurement (with rider)

The Rear Ride Height Sag is the difference between the unloaded and the loaded measurements (with rider). The Rear Ride Height Sag is determined as in the following example:

Unloaded measurement	=	600 mm	
Loaded measurement	=	510 mm	(with rider)
Rear Ride Height Sag	=	90 mm	

The Rear Ride Height Sag should be between 85 and 100 mm. A Rear Ride Height Sag of 85 mm improves turning ability on tight tracks, at the cost of slightly reduced straight line stability, by transferring more weight to the front-end and by producing a steeper steering geometry. A setting of 100 mm improves stability on faster tracks with fewer turns, but reduces turning performance slightly by transferring more weight to the rear-end, and producing a more kicked out steering geometry.

To adjust the Rear Ride Height Sag, first loosen the lock nut of the preload adjustment ring using a special spanner. To increase the Rear Ride Height Sag, decrease the shock spring preload by turning the preload adjustment ring anti clockwise as illustrated in Fig. 3. To decrease the Rear Ride Height Sag, increase the spring preload by turning the preload adjustment ring clockwise. Don't forget to retighten the lock nut after any adjustments.

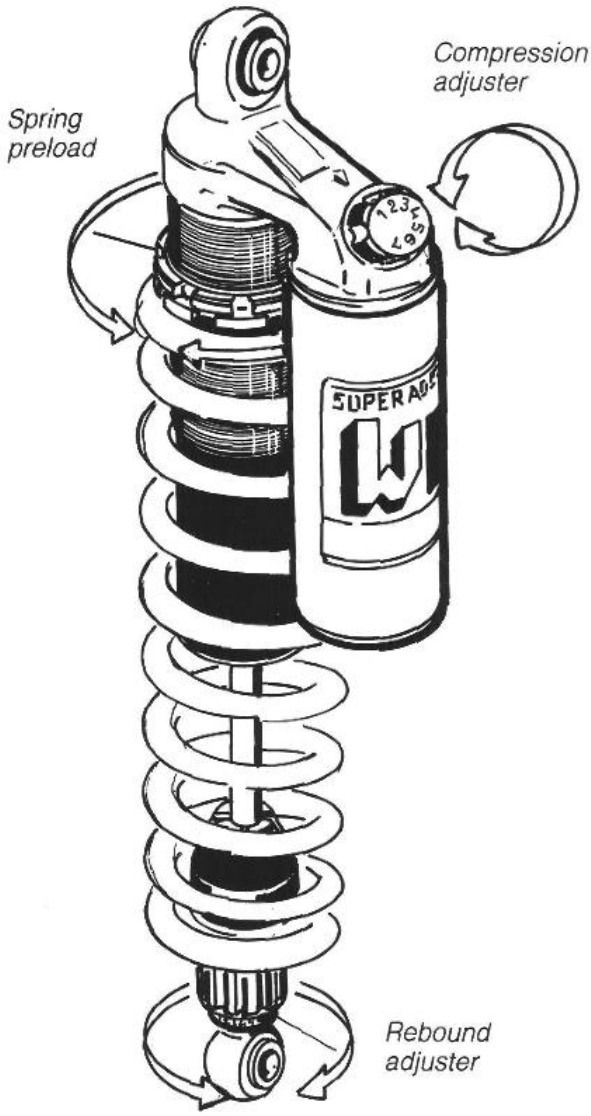

Fig. 3 spring preload, compression and rebound adjustments

DETERMINING WHETHER YOU HAVE THE CORRECT SHOCK SPRING

Once the correct Rear Ride Height Sag has been set, the Static Sag without rider should then be determined.

- Ask a helper to hold the machine upright.
- Measure the distance once more between the rear axle and a fixed point on the rear of the seat (without rider), as illustrated in Fig. 4.

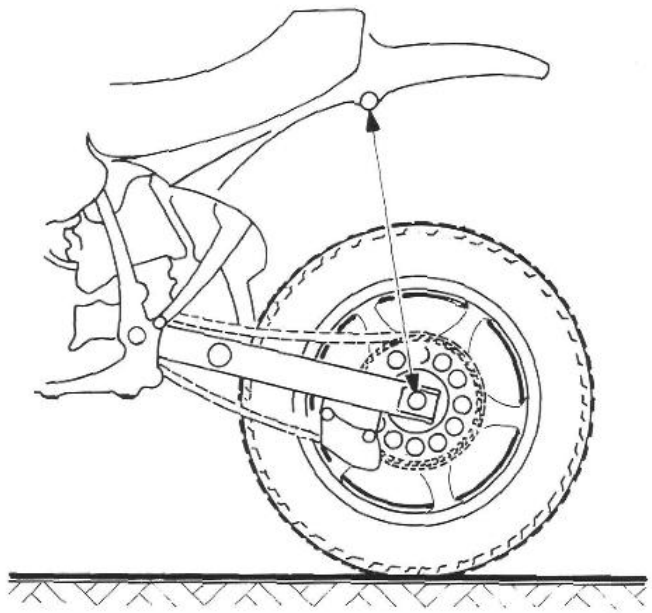

Fig. 4 loaded measurement (without rider)

- The Static Sag is determined as in the following example:

Unloaded measurement	=	600 mm	
Loaded measurement	=	585 mm	(without rider)
Static Sag	=	15 mm	

This Static Sag must be between 10 and 25 mm. If the sag is less than 10 mm, then the spring is too soft for your weight (spring rate too low). A sag of more than 25 mm means that the spring is too hard (spring rate too high) for your weight. The explanation of this is as follows; If the shock spring is too soft for your weight, it will be necessary to increase the spring preload quite considerably in order to achieve the correct Rear Ride Height Sag. In this case, the spring will be preloaded so much that the rear-end tops out when the rider dismounts. If the shock spring is too stiff for your weight, it will be necessary to reduce the spring preload considerably to achieve the correct Rear Ride Height Sag. As a result, the spring will not be compressed enough to allow the suspension to extend sufficiently.

CHANGING THE SHOCK SPRING

If a harder or softer spring is needed, the replacement is carried out as follows:

- Dismantle the shock absorber from the machine.
- Clamp the upper shock mount of the damper in a bench vice, which is either fitted with aluminium jaws or a shop towel for protection (see Fig. 5).

- Unscrew the locking nut, and turn this with the adjusting ring far enough to be able to remove the spring retainer (see Fig. 6).

- Fit another spring and replace the spring retainer.
- Adjust the initial spring preload to 12 mm. The preload is the difference between the free length of the spring and the length of the spring when fitted on shock absorber.
- Mount the shock absorber on to the machine and repeat the procedure for adjustment of the Rear Ride Height Sag and the Static Sag.
- Once the Rear Ride Height Sag has been correctly adjusted, remember to retighten the locking nut.

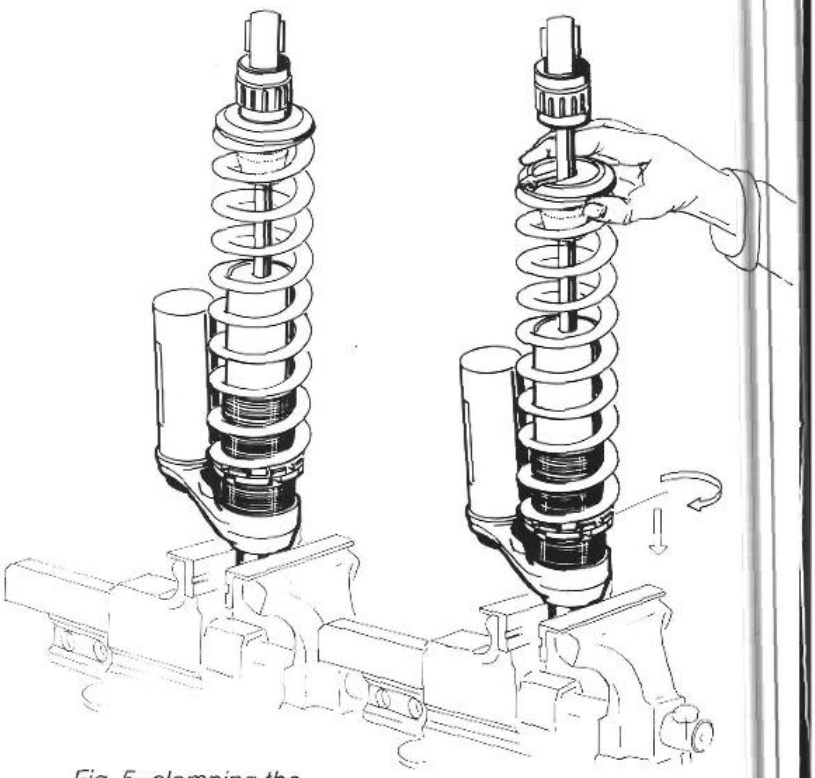

Fig. 5 clamping the schockabsorber

Fig. 6 removing the spring retainer

ADJUSTING FRONT FORK SPRING PRELOAD

In order to ensure optimum functioning of your front fork, the preload of the front fork springs needs to be correctly adjusted. This is carried out as follows:

- Place the machine on a stand with the front wheel lifted off the ground.
- Measure the distance from the front axle to the guide bar of the chrome tube protector as illustrated in Fig. 7.
- Remove the machine from the stand and place both wheels on the ground.
- Bounce the front fork a few times so that it settles to a good reference point.
- Ask a helper to hold the machine upright.
- Determine once more the distance between the front axle and the guide bar. (without rider!).

The difference between the two measurements is the Static Sag. This value must be between 20 and 35 mm. If the Static Sag is greater than 35 mm, then the preload of the front fork springs should be increased. If the Static Sag is less than 20 mm, the preload should be reduced. The correct spring preload specification is between 5 and 20 mm.

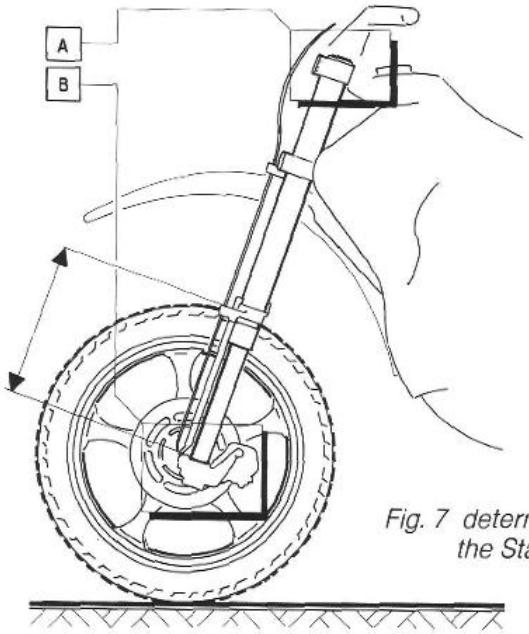

Fig. 7 determining the Static Sag

Fig. 7A REBOUND ADJUSTER

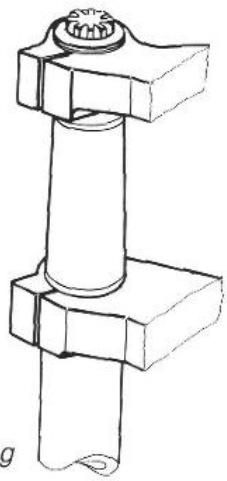

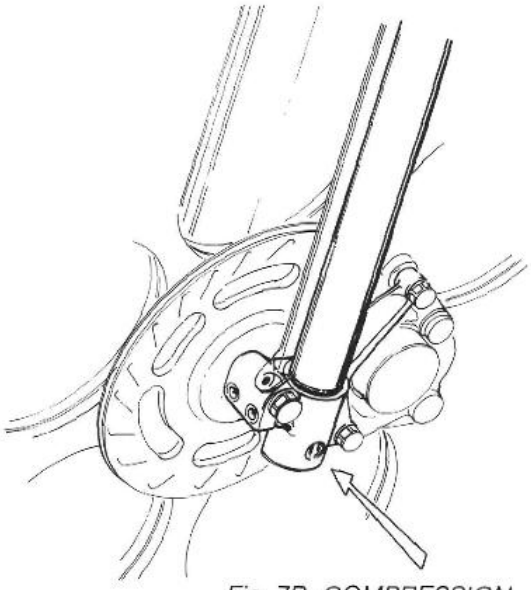

Fig. 7B COMPRESSION ADJUSTER

DETERMINING WHETHER YOU HAVE THE CORRECT FORK SPRING

Thanks to the possibility of carrying out external compression damping adjustments and spring preload adjustments, and of varying the oil level height, the standard fork springs fitted to your White Power fork will cover a wide range of rider weights and terrain conditions.

The standard setting for the external rebound and compression adjuster is position no. 3. If, after correctly adjusting the preload, you experience hard bottoming at many points around the race track, which is not corrected when you increase the compression damping, then the air chamber length must be decreased by raising the oil level. Altering the length of the air chamber greatly influences the force in the last third of the fork stroke, as illustrated in Fig. 8.

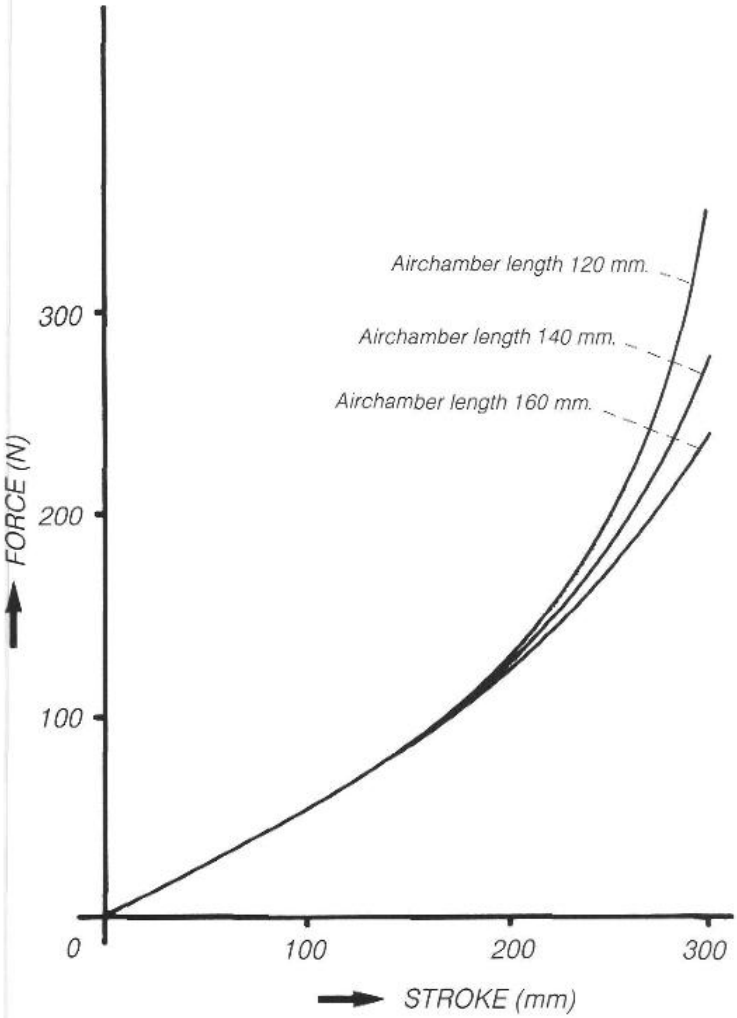

Fig. 8 influence of the airchamber length

When altering the air chamber length, be sure that the oillevel **between** inner- and outer leg is up to the four holes on the top of the inner leg. See chapter changing oillevel.
The air chamber length should not be less than 120 mm, or greater than 160 mm with the fork fully compressed. Reducing the air chamber length to less than 120 mm will cause too high pressures in the fork. If the air chamber length is increased to more than 160 mm, there will be a loss of damping control near full extension.

If, after reducing the air chamber length to its minimum size of 120 mm, the fork still bottoms, then the spring rate needs to be increased by one step.

If there is a feeling of harshness and a general stiffness and the fork rarely bottoms, which cannot be corrected by decreasing the compression damping, then the air chamber length should be increased to a maximum of 160 mm. If the forks are still too hard, then the next softer fork spring rate, should be installed.

When changing springs, they should be installed at the identical preload as the standard spring specification, the air chamber length should be reset to its original value and the compression and rebound damping adjuster should be reset to position no. 3.

CHANGING PRELOAD, FORK SPRINGS, OIL LEVEL OR OIL

A) Dismantling the front fork.

- Clamp the outer fork tube in a bench vice which is fitted with aluminium jaws or shop towel in order to protect the fork.
- Set the adjustment of the red rebound adjustment knob to position 1. (Turn anti-clockwise towards position marked FAST.)
- Remove the rebound adjustment knob with a small screwdriver (see Fig. 9).

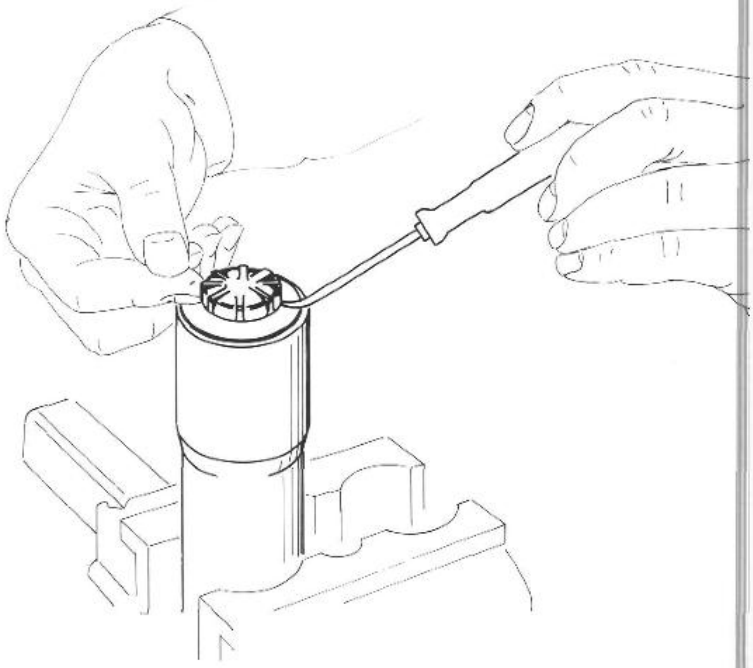

Fig. 9 removing the rebound adjustment knob

- Unscrew the screw cover with a 22 mm box end wrench (see Fig. 10).

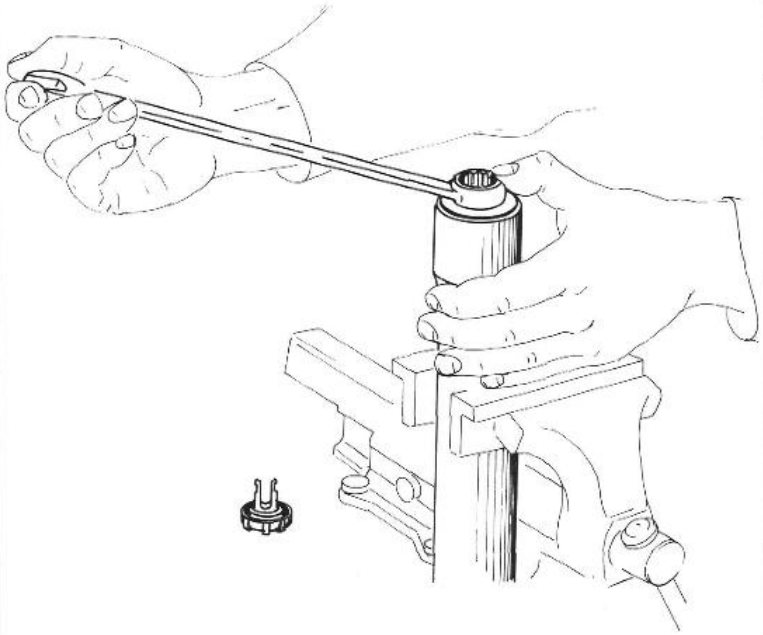

Fig. 10 removing the screw cover

- Remove the fork leg from the vice and push the outer fork tube fully downwards.
- Remove the two steel spring retainers and plastic preload spacers, if fitted (see Fig. 11).

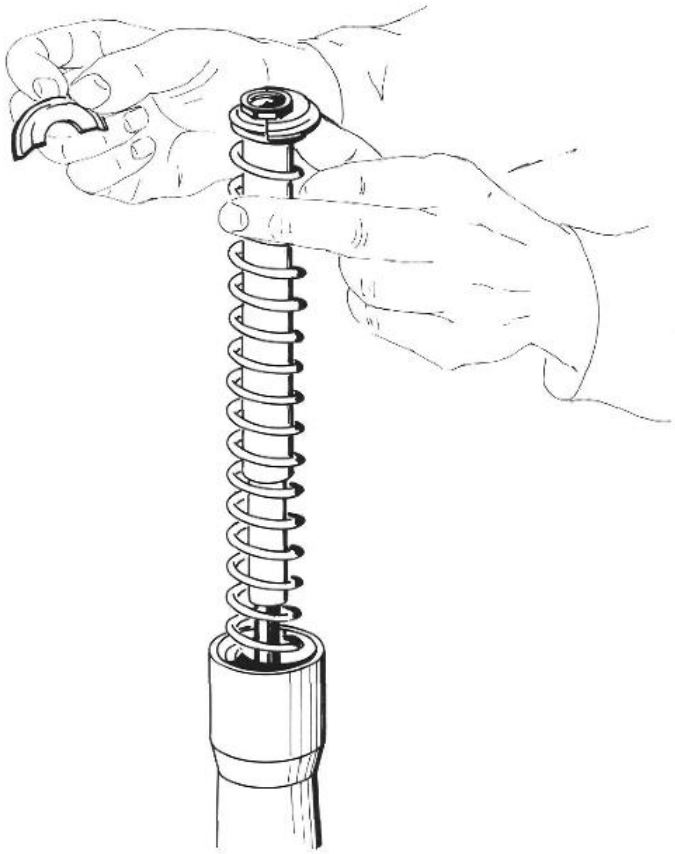

Fig. 11 removing the spring retainers

- Remove the spring.
- Invert the fork leg over an oil-catching tray and move the piston rod up and down, so that the oil is pumped out of the cartridge (see Fig. 12).
- Allow the fork leg to drip for a time to ensure that no old oil remains in the fork.

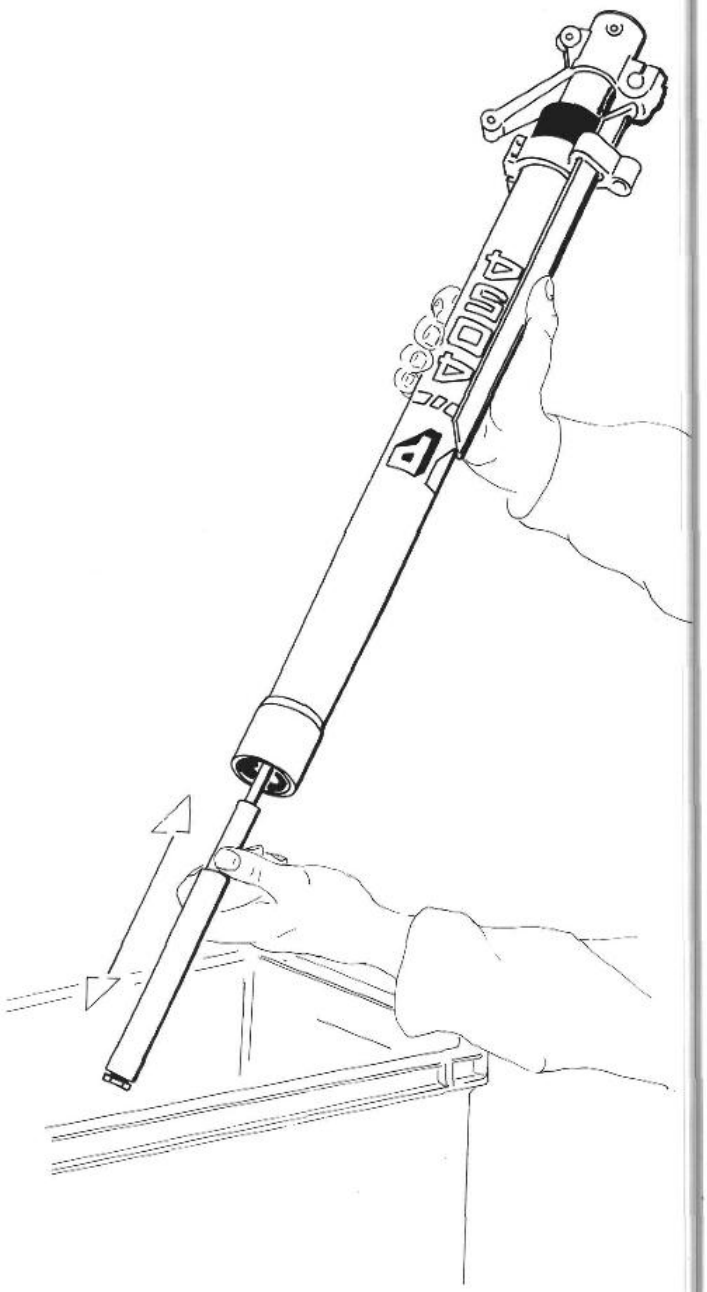

Fig. 12 pumping the oil out of the fork

B) Renewing the oil and adjustment of air chamber-length.

- Fill the **fully compressed** fork leg with special White Power Cartridge Oil SAE 10 to approximately 10 mm above the red plastic locking ring. Continue to fill until no more air bubbles appear in the oil. (See Fig. 13).

NOTE:
White Power strongly recommends that the special White Power Cartridge Oil be used for your front fork. This fadefree front fork oil has been specially developed for front forks fitted with a cartridge damping system, and reduces foam formation, friction and wear to a minimum, and has optimum damping characteristics.

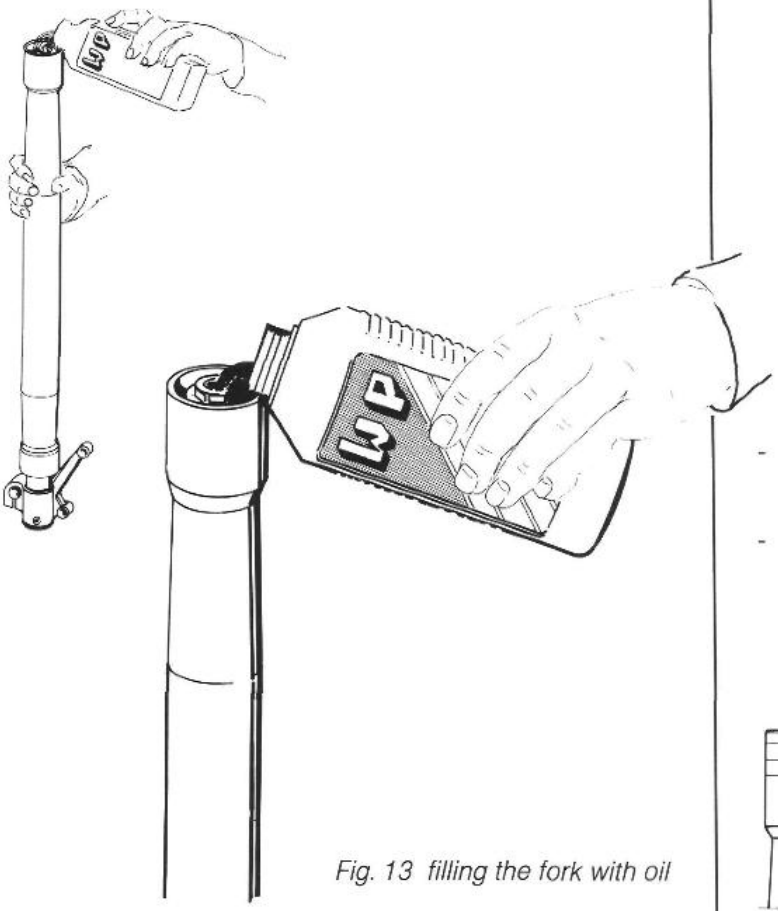

Fig. 13 filling the fork with oil

- Place the axle clamp on the ground and pull the outer fork tube upwards as far as possible.
- With the palm of your hand gently push the outer fork tube downwards, to the axle clamp. Allow the air to escape slowly from the fork by occasionally raising the palm of your hand slightly. Air pressure will force the oil between the inner and outer fork tubes, which is very important in determining correct oil levels. Do this only one time.
- Add more oil if necessary, filling to approx. 5 mm above the red plastic locking ring, when fully compressed.
- Move the piston rod **gently** up and down, until no further air bubbles escape from the two small holes on the side of the black plastic sleeve when fully stroked (see Fig. 14). Attention! Oil should only come out of these two small holes when the piston rod is moved upwards. If oil also comes out when the piston rod is pushed downwards, the one-way internal valve system is not functioning properly, consult your White Power dealer.

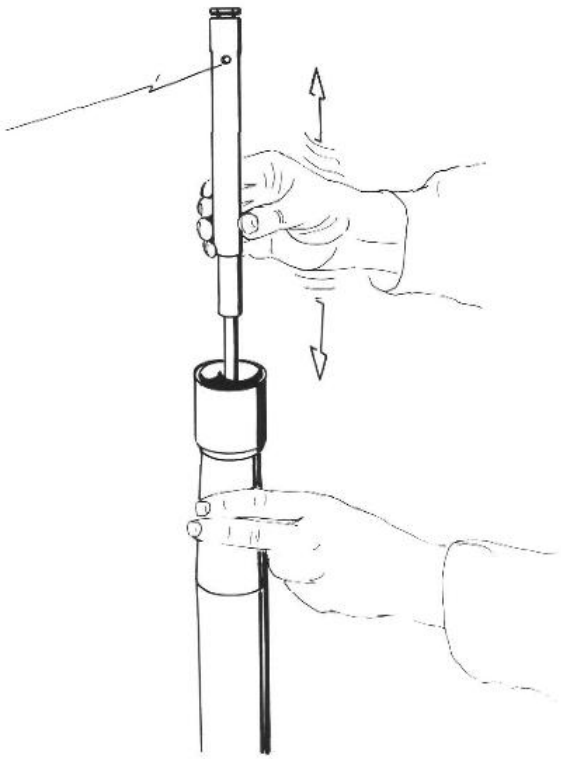

Fig. 14 bleeding the air out

- After bleeding all of the air from the fork, fully compress the outer fork leg and piston rod to the axle clamp.
- Set the correct air chamber length by removing excess oil with a sypon, or if necessary by adding extra oil. The standard air chamber length is 130 mm (see Fig. 15).

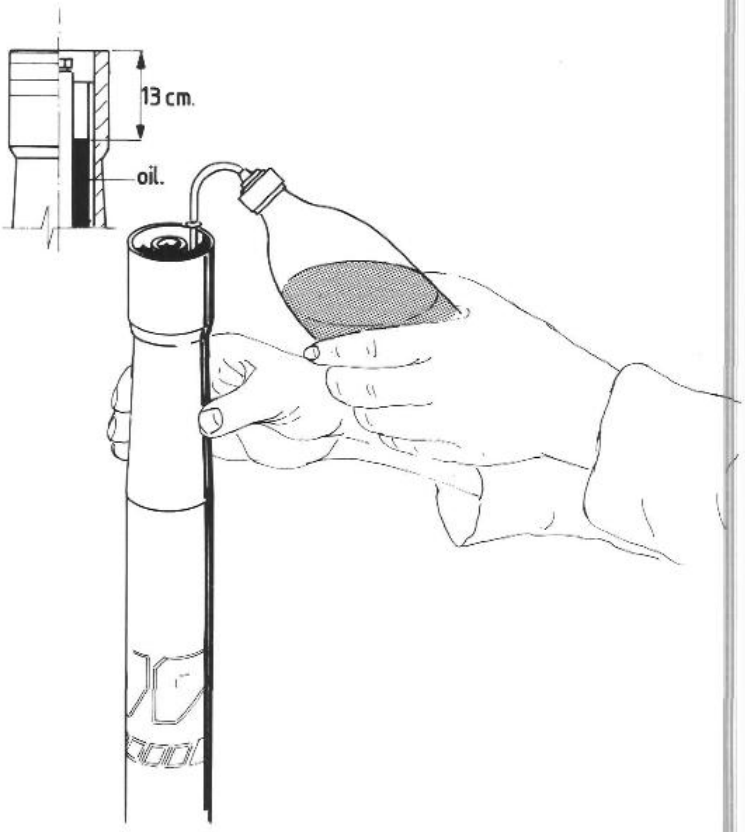

Fig. 15 adjusting the oillevel

C) Fitting the fork spring and adjustment of spring preload.

- Pull the cartridge piston rod upwards.
- Slide the correct spring over the spindle; Hold the black plastic sleeve with your fingers between the spring coils, to prevent the sleeve slipping down. Push a steel pin with a maximum diameter of 5 mm into one of the two small holes on the side of the black sleeve. Turn the spring so that the piston rod rises. Continue turning until the piston rod is at the highest position and there is no more preload on the spring.
- If the upper end of the spring is level with the upper end of the cartridge piston rod, then the spring will have a preload of 5 mm after fitting the two half spring retainers.
- Measure the distance by which the spring protrudes, using a vernier caliper (see Fig. 16).

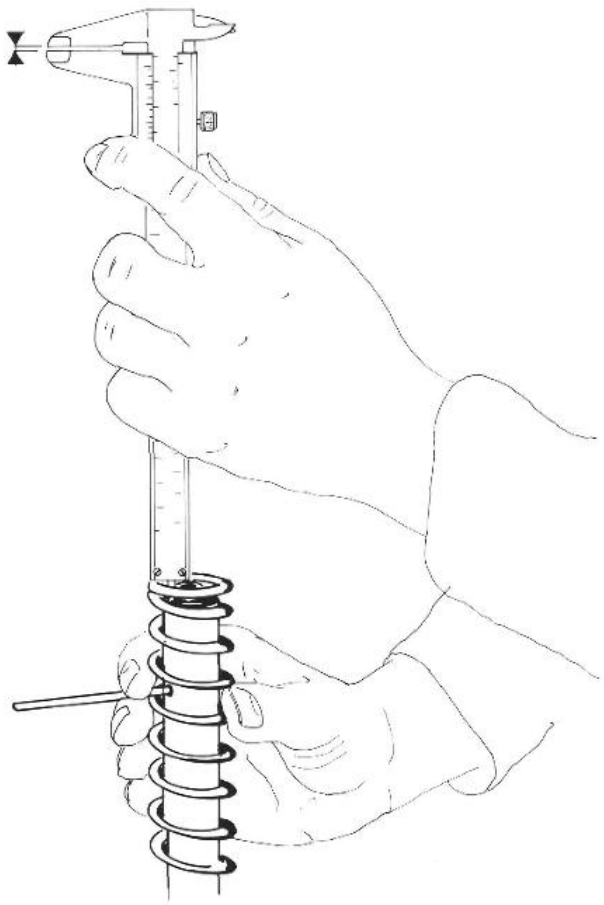

Fig. 16 measuring the preload

- If the spring protrudes 4 mm above the piston rod, then the preload is 5 + 4 = 9 mm. Set the correct preload by adding plastic preload spacers. These spacers are available in thicknesses of 2.5, 5 and 10 mm.
- Continue to screw the spring downwards.
- Fit the two half spring retainers, with the outer edge facing downwards, into the groove in the cartridge piston rod (see Fig. 17).

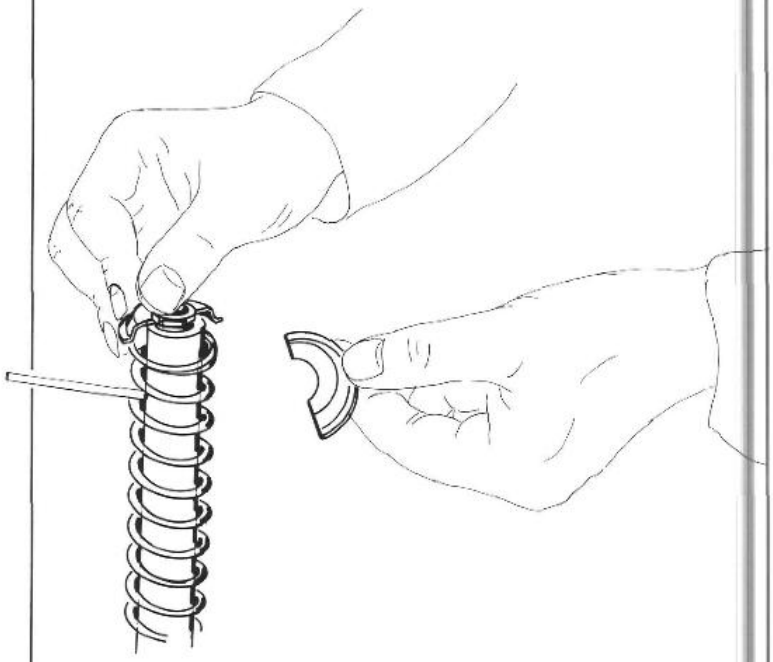

Fig. 17 mounting the spring retainers

- Remove the steel pin from the hole in the sleeve.
- Pull the outer fork tube upwards until the spring retainers are in their seatings.
- Clamp the outer fork tube in the bench vice.
- Check that the rubber ring on the inside of the screw cover is correctly positioned in its groove and is not damaged.
- Fit the screw cover using a 22 mm box end wrench (30-35 Nm torque).
- Remove excess oil from the hole in the screw cover with compressed air or a contact cleaner.
- Clean the red rebound adjustment knob and the O-ring and press the adjustment knob into the screw cover.

- Check the position of the rebound adjustment knob and the compression set screw and adjust to the correct setting (standard position for both adjustment knob and set screw is position no. 3).
- Degrease the outer fork leg before mounting in the triple clamps.

IMPORTANT:
Fit the M8 bolts of the lowest triple clamps, tightening to a maximum torque of 15 Nm, and the upper triple clamp bolts to a maximum torque of 25 Nm. Caution: If the lower triple clamp bolts are overtightened, the fork will bind, stick or feel very harsh.

SHOCK AND FORK COMPRESSION AND REBOUND DAMPING

A feature of White Power components is that both the compression and rebound damping are externally adjustable. What do the terms compression and rebound damping actually mean? The compression damping is the damping force which arises on the inward stroke of the shock absorber or front fork. The compression damping serves to support the spring in every speed range and enables the shocks or forks to absorb impact. By "speed range" we mean the speed at which the shock absorber or the front fork is compressed and rebounds, not the speed at which the motorcycle is traveling. This compression damping is very important. It ensures that the suspension responds flexibly, but without bottoming.
The rebound damping is the damping force arising on the outward stroke of the shock absorber or front fork. Without this rebound damping, the bike would simply continue rocking when the suspension was compressed; This rocking would eventually stop due to the friction of the link system. Bij damping the outward stroke, this rocking can be reduced to a minimum.
Since the compression and rebound damping can be easily adjusted by turning a knob, the damping can be altered to suit every circuit optimally, and fine tuned to personal requirements. The standard setting for the White Power shock is compression position no. 3 on a scale of 7 (knob on shock reservoir), and rebound position no. 4 on a scale of 11 (knob at bottom of shock). The standard setting for the Upside-Down fork is compression no. 3 on a scale of 8 (screw on side of each axle clamp) and rebound position no. 3 on a scale of 7 (knob at top of each fork leg). See also Fig. 3.

ADJUSTING THE COMPRESSION AND REBOUND DAMPING

Prior to making any adjustments to the suspension damping, you will need to lay out a test track. This should not be too long (max. 2-3 km / 1,5-2 miles). Ensure that the test track is rough, and similar to the most demanding conditions you will experience in your racing or riding. The damping characteristics of the White Power shocks and front forks are selected by a team of very experienced test riders, so that the standard settings should be near perfect for the majority of riders. However, tracks and riders are not all the same. We have therefore compiled the following adjustment guide to help you adjust the shock absorber and front fork to suit your personal requirements.
Begin by setting the shock rebound damping. Once you have become thoroughly familiar with the circuit, ride for approximately 15 minutes at the standard setting. You can then begin adjusting the suspension. Set the rebound knob to position no. 1 (quickest return). Take note of the action of the rear shock, and concentrate on what the bike is doing and how it handles - it is not necessary to break the lap record straight away. After several laps, turn the rebound knob to position no. 11 (slowest return). By adjusting to the extremes of the shock rebound damping range, you should be able to note the difference in the handling of the machine. The possible results of incorrect adjustment are given in the adjusting guide. Now fine-tune the rebound damping to the setting which feels best for you. After the shock rebound has been correctly adjusted, you can adjust the shock compression damping in the same way. Begin with the knob on position no. 3. If you recognise the symptoms noted in the adjusting guide as being the result of too little compression damping, then adjust to a higher number. Adjust in large steps rather than small ones (3 or 4 numbers at a time) so that you can feel the difference. Following this, fine-tune to the best setting for you. Most enduro and off-road riders will prefer a softer compression adjustment position, whereas motocross riders, racing on very rough tracks with large jumps and G-force bumps, may prefer a harder position.

NOTE:
Position no. 1 gives softest compression damping force and position no. 7 gives hardest compression damping.
Begin adjusting the front fork in the same way, starting with the compression damping, and setting this initially at position no. 3. This number is then increased if the fork is too soft, or decreased if the fork is too harsh (see adjusting guide).

NOTE:
Position no. 1 gives softest compression damping and position no. 8 gives hardest compression damping. When in doubt, most riders will prefer a fork compression damping setting at the soft end of the damping range.
Once you have found the optimum fork compression damping, adjust the rebound damping (see adjusting guide). Turning the rebound knob anti-clockwise will decrease the rebound damping (faster out) with the lightest setting being position no. 1. Turning the rebound knob clockwise towards position no. 7 will increase the rebound damping (slower out).

Bear in mind that a properly adjusted suspension system may bottom very slightly at least once per lap at full racing speed. This is normal and acceptable.

ADJUSTING GUIDE

SHOCK ABSORBER

Spring rate

Too soft:
When the Rear Ride Height Sag is correctly adjusted (between 85-100 mm), the Static Sag is less than 10 mm; This leads to bottoming of the shock despite maximum compression damping (no. 7).

Too hard:
When Rear Ride Height Sag is correctly adjusted, the Static Sag is more than 25 mm; The shock rarely or never bottoms, despite minimum compression damping (no. 1).

Spring preload

Too little:
Rear-end too low; Static Sag more than 25 mm; Poor traction.

Too much:
Static Sag less than 10 mm; Shock absorber will top out; Kicking on braking bumps; Steering head shaking.

NOTE:
Raising the preload will not eliminate bottoming.

Compression damping

Too little:
Soft/mushy feeling; Hard bottoming; Slow forward progress when landing from a large jump-

Too much:
Stiff/harsh feeling, with suspension rarely bottoming; Rider tends to want to shift his eight backwards to help absorb the bumps and landings; Shock remains too rigid to absorb bumps and uses too little travel.

Rebound damping

Too little:
Gives the machine a springy feel; Kicking up when hitting bumps, rocks and braking bumps; Tendency for the rear of the machine to ride high, pushing rider forwards; Machine bounces upwards after landing from a large bump.

Too much:
Harsh feeling when hitting a quick succession of bumps; Tendency for the rear of the machine to ride low; Packing down; Poor traction; Machine may tend to side hop.

FRONT FORK

Air chamber lenght (oil-level)

Too great:
Bottoming of the fork, despite a correct spring rate and maximum compression damping (note: max. air chamber length = 160 mm).

Too small:
No bottoming of the fork, despite a correct spring rate and minimum compression damping; The fork does not use the full stroke, and rebounds too quickly, as if there is too little rebound damping.
(Note: min. air chamber length = 120 mm)
The air chamber length will only influence the last third of the stroke.

Spring rate

Too soft:
Bottoming of the fork, despite minimum air chamber length and maximum compression damping; More than 20 mm preload needed to reach a static sag of 20-35 mm; Front-end too low on downhill sections.

Too hard:
Fork rarely or never bottoms, despite maximum air chamber length and minimum compression damping; Fork does not use full travel.

Spring preload

Too little:
Static Sag more than 35 mm; Front-end too low when going into a bend; Easy turning in.
(Note: min. preload = 5 mm.)

Too much:
Static Sag less than 20 mm; Forks feel stiff/harsh; Difficult turning in; Lack of low speed speed tight turning ability. (Note: max. preload = 20 mm.)

The preload will have the greatest influence on the force at the beginning of the stroke.

Compression damping

Too little:
Bottoming; Dive braking into a corner; Low ride height; Easy turning in; Fork is unstable.

Too much:
Harsh feeling; Fork rarely bottoms; High ride height despite a soft spring and/or little preload; Difficult turning in.

Rebound damping

Too little:
Fork extends too quickly and wheel springs up from the ground after landing from a large jump; Difficulty in maintaining a straight path through rocks; Front-end attempts to climb the verge while cornering; High ride height; Difficult turning in.

Too much:
Harsh feeling; Fails to rebound after landing from a large jump or on brake bumps; Low ride height; Easy turning in; Bottoming sometimes occurs even though compression damping, spring rate and oil level are all correct.

SUSPENSION ADJUSTMENTS RELATED TO SPECIFIC TRACK CONDITIONS

The following recommendations are a guide to front and rear suspension adjustments that will benefit the rider by giving improved handling for specific track conditions. Prior to make any of the adjustments recommended, the rider should carry out the Suspension Tuning Procedures recommended earlier in this manual. This will familiarise the rider with the effects that the fork, shock damping and ride height have on the handling of this machine.

For supercross (stadium), sand tracks, soft or muddy ground you need more compression damping front and rear. On hard ground/hard terrain and expecially on rocks, you need less compression damping front and rear.

On hard ground/hard terrain you need a little less rebound damping front and rear, and for supercross, a little less rebound on the rear. Sand tracks and soft terrain require slightly more rebound damping on the rear because the distance between the bumps is longer, so the shock has more time to extend before the next bump. On rocks you need more rebound damping both front and rear.

In a muddy race, you need stiffer springs at the front and, expecially, at the rear because your bike becomes much heavier with the accumulation of mud. If you don't compensate for the additional weight of the mud that collects during the race, the suspension will be compressed too far most of the time and the bike won't handle very well. The spring rate requirements probably won't change much between a hard track and a sand track.

On sand tracks/soft terrain, you can lower the rear of the bike by adjusting the Rear Rider Height Sag to improve straight line stability although the rear wheel traction will be a little worse. On tight tracks/supercross you can decrease the Rear Ride Height Sag to improve turning ability.

FRONT FORK HEIGHT

The position of the fork legs in the triple clamps is adjustable. On long, fast tracks, where there are few turns, consider an alternative position with the top of each fork leg flush with the top of the upper triple clamp. This will increase fork rake and trail and straight line stability will therefore be improved (see Fig. 18).

On tight tracks with many turns, you can lower the front of the bike by pushing the fork legs through the triple clamps in 5 mm increments. The fork rake and trail will be decreased and turning ability will be improved.

NOTE: - Never position the top surface of the fork leg more than 15 mm above the upper triple clamp (see Fig. 19).
- Max. tightening torque upper clamp bolts = 25 Nm.
- Max. tightening torque lower clamp bolts = 15 Nm.

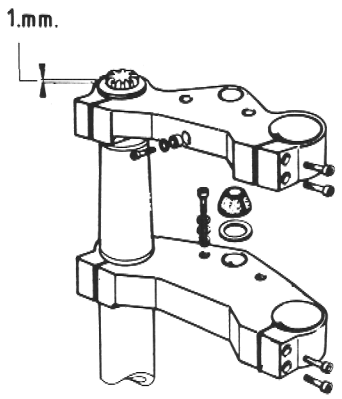

Fig. 18 fork height

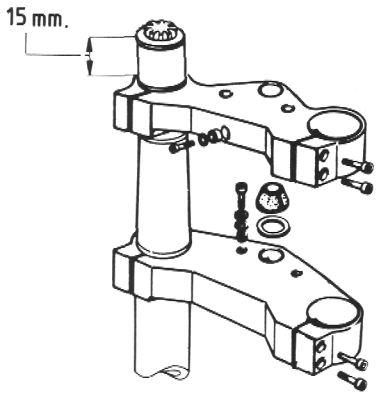

Fig. 19 max. fork height

SUMMARY

A rider who has spent some time testing and familiarising himself with the suspension fine tuning capabilities of his White Power suspension components, will have a decided advantage over his competition. Rather than constantly altering his riding style to compensate for handling quirks of his machine, he will quickly be able to make the necessary adjustments to his suspension to improve its handling. The knowledgeable rider will be rewarded by his efforts in learning to fine tune his suspension components to suit his personal style and riding terrain. He will be able to ride faster and harder, with more safety and less fatigue.

SUSPENSION MAINTENANCE REQUIREMENTS

To maintain the maximum performance of your White Power suspension components,they requires a regular maintenance schedule. White Power recommends front fork oil changes every 10 hours (10 races) of use with a complete service by your local White Power dealer (seals, 'O'-rings, oil, valve and spring adjustments) after 20 to 25 hours of use.
The rear shock should be completely serviced (oil change, new seals and piston rings, 'O'-rings and valve adjustment) after 20 to 25 hours of use.
After each race, check all bearings of the link system and swingarm for free play and binding.
Regrease if neccesary with molydenum disulphide grease. Recheck for binding after reassembling machine. Pro riders and hard riding amateurs may require more frequent service to maintain the top performance capabilities of their White Power suspension components. In all cases, complete service on White Power forks and shocks should only be carried out by White Power dealers, who are factory trained in servicing the new White Power components.

If you have any questions regarding your White Power suspension, please feel free to call your local White Power dealer. They are staffed with knowledgeable White Power factory trained technicians, who can assist you with all your questions and service needs.