Art.-Nr. 3.203.25
I. 91

KTM '91
ORIGINAL SPARE PARTS

# MOTOR TYPEN
# ENGINE TYPE

# 555-350 cc
# 565-500 cc / 540 cc

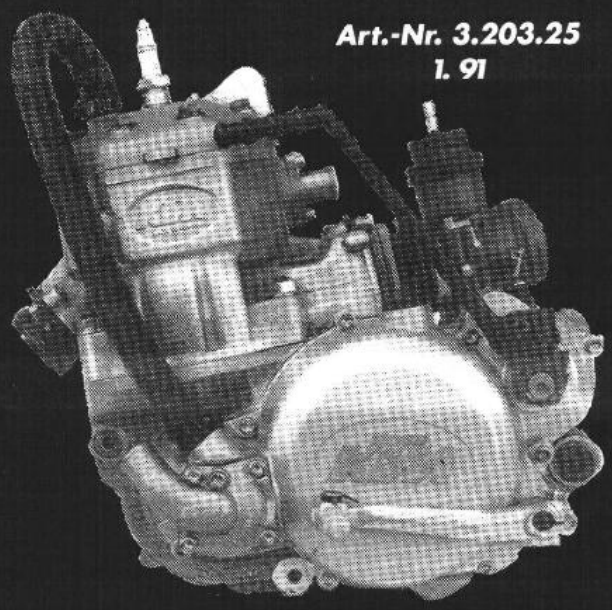

## TECHNISCHE DATEN MOTOR

| MOTOR | 350 | 500 |
|---|---|---|
| BAUART | Flüssigkeitsgekühlter Einzylinder-Zweitakt-Ottomotor | |
| HUBRAUM | 345 ccm | 498 ccm |
| BOHRUNG/HUB | 75/78 mm | 89/80 mm |
| KRAFTSTOFF | Superkraftstoff Roz 98, mit Zweitaktöl gemischt | Eurosuper Roz 95 bleifrei, mit Zweitaktöl gemischt |
| MISCHUNGS-VERHÄLTNIS | 1:40 – 1:50 bei Verwendung von hochwertigem Zweitaktöl | |
| MASS „X„ | 0,9 – 1,0 mm | 1,0 – 1,1 mm |
| ZÜNDZEITPUNKT | 2,0 – 2,1 mm (16,3 – 16,7 Grad) vor OT | 2,1 – 2,2 mm (16,5 – 16,9 Grad) vor OT |
| ZÜNDKERZE | Bosch W2 CS | Bosch W2CC |
| ELEKTRODENABSTAND | 0,6 mm | 0,6 mm |
| GETRIEBESCHMIERUNG | 0,8 Liter Motoröl SAE 30 | |
| KÜHLFLÜSSIGKEIT | 1,1 Liter, Mischungsverhältnis 2:1 – Frostschutzmittel : Wasser | |
| ZÜNDANLAGE | SEM K10 | Motoplat 176-1 |
| GENERATORLEISTUNG | 12V 130W | kein Generator |

●Um nach dem wiedermontieren des Zylinders die richtige Einstellung zu erhalten, ist folgendes "Mass" einzuhalten (unterlegen verschieden starker Zylinder-Fußdichtungen.)

Beim Messen ist der Zylinder niederzuspannen und der Kolben auf den oberen Totpunkt zu stellen.

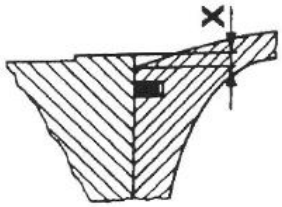


● In order to ensure a correct fit when the cylinder is reassembled, the dimension "X" must be maintained by using different thicknesses for the cylinder bottom gasket.

When measuring "X", the cylinder sould be clamped down and the piston adjust to the TDC position.

## TECHNICAL DATA ENGINE

| ENGINE | 350 | 500 | 540 |
|---|---|---|---|
| DESIGN | Liquid-cooled single-cylinder two stroke engine | | |
| PISTON DISPLACEMENT | 345 cc | 498 cc | 548 cc |
| BORE/STROKE | 75/78 mm | 89/80 mm | 92,25/82 mm |
| FUEL | SUPER fuel, research octane no 98, mixed with two-stroke oil | Eurosuper fuel, research octane no 95, unleaded, mixed with two-stroke oil | |
| OIL/GASOLINE RATIO | 1:40 – 1:50 when using high grade two-stroke oil | | |
| DIMENSION „X" | 0,9 – 1,0 mm | 1,0 – 1,1 mm | 1,25 – 1,35 mm |
| IGNITION TIMING | 2,0 – 2,1 mm (16,3 – 16,7 Degrees) BTDC | 2,1 – 2,2 mm (16,5 – 16,9 Degrees) BTDC | 1,45 – 1,55 mm (13,4 – 13,8 Degrees) BTDC |
| SPARK PLUG | BOSCH W2CS | BOSCH W2CC | BOSCH W08 CS |
| ELECTRODE GAP | 0,6 mm | 0,6 mm | 0,6 mm |
| GEAR LUBRICATION | 0,8 Liter engine oil SAE 30 | | 0,8l Hypoid oil SAE 80 |
| COOLANT | 1,1 Liters, mixture 2:1 of antifreeze and water | | |
| IGNITION SYSTEM | SEM K10 | Motoplat 176-1 | SEM K11 |
| GENERATOR OUTPUT | 12V 130W | no generator | 12V 130W |

## GETRIEBEUEBERSETZUNGEN / GEAR RATIOS

| PRIMAER-UEBERSETZUNG | GETRIEBE-UEBERSETZUNG | ORIGINAL-UEBERSETZ HINTERRAD |
|---|---|---|
| 29:76 | 4-GANG 5-GANG<br>1. GANG -- 14:35<br>2. GANG 16:24 15:24<br>3. GANG 18:21 18:21<br>4. GANG 20:19 20:19<br>5. GANG 27:21 27:21 | MX 14:50<br>ENDURO 14:52<br>14:45 |

| Primary Ratios | Transmission | Original Final Drive Ratio |
|---|---|---|
| 29:76 | 4-Speed 5-Speed<br>1st gear -- 14:35<br>2ndgear 16:24 15:24<br>3rd gear 18:21 18:21<br>4th gear 20:19 20:19<br>5th gear 27:21 27:21<br>27:20<br>(540 D-XC) | MX 14:50<br>ENDURO 14:52 |

## VERGASER-GRUNDEINSTELLUNG / BASIC CARBURETTOR SETTING

| | 500 MX | 350 END/MX | 350 END (BRD) | |
|---|---|---|---|---|
| VERGASERTYPE | DELL'ORTO VHSB 38 | DELL'ORTO PHBE 38 GD | BING 55/38/203 | CARBURETTOR TYPE |
| HAUPTDUESE | 190 | 200 | 170 (200) | MAIN JET |
| NADELDUESE | 268 DQ | 270 AB | 280 (284) | NEEDLE JET |
| LEERLAUFDUESE | 50 | 65 (70) | 70 | IDLING JET |
| STARTDUESE | 60 | 70 | 60 | STARTING JET |
| DUESENNADEL | K46 | K13 | 6 L 6 | JET NEEDLE |
| NADELPOSITION VON OBEN | 2 | 2 | 2 | NEEDLE POSITION FROM TOP |
| SCHIEBER | 40 | 40 | 160 | THROTTLE VALVE |
| GEMISCHREGULIER SCHRAUBE OFFEN | 1.5 Umdr./turn | 1.5 Umdr./turn | 1.75 Umdr./turn | MIXTURE ADJUSTMENT SCREW OPEN |
| ZERSTAEUBER | -- | -- | 5 | VAPORIZER |

## TOLERANZEN - EINBAUSPIEL / TOLERANCES AND FITTING CLEARANCES

| | | |
|---|---|---|
| KOLBENEINBAUSPIELE | 350 : 0,03 – 0,04 mm<br>500 : 0,05 – 0,06 mm<br>540 : 0,055 – 0,065 mm | piston fitting clearance |
| KOLBENRING-STOSSPIEL | 0,2 – max. 0,6 mm | piston ring end cap |
| PLEUELLAGER-RADIAL | 0,035 – 0,046 mm / max. 0,065 mm | connecting rod bearing – radial clearance |
| GETRIEBEWELLEN-AXIALSPIEL | 0,2 – 0,4 mm | transmission shaft end float |
| KUPPLUNGSDRUCKFEDERN-LAENGE | 350/500 : ø 2,5 × 38 mm (7W)<br>540 ø2,7 × 38 mm | clutch springs – length |
| KURBELWELLE-AXIALSPIEL | 0,2 ± 0,05 mm | crankshaft end float |

## DICHTUNGSSTAERKEN / GASKET THICKNESS

| | | |
|---|---|---|
| MOTORGEHAEUSE | 0,3 mm | crank case |
| KUPPLUNGSDECKEL | 0,75mm | clutch cover |
| ZYLINDERFUSSDICHTUNG | NACH BEDARF/as required | cylinder bottom gasket |
| LIEFERBARE FUSSDICHTUNGEN | 0,2 / 0,3 / 0,5 mm | available bottom gaskets |
| AUSPUFFSTUTZENDICHTUNG | 1 mm | exhaust stub gasket |
| WASSERRAUMDICHTUNG | 0,2 mm | cylinder head gasket |

## ANZUGSDREHMOMENTE / TIGHTENING TORQUES

| | | | |
|---|---|---|---|
| ZYLINDERKOPFSCHRAUBEN | M 8 | 34 Nm | cylinder head bolts |
| BUNDMUTTERN-ZYLINDERFUSS | M 10 | 39 Nm | flange nuts - cylinder bottom |
| BUNDMUTTER-SCHWUNG (LINKSGEWINDE) | M 12 x 1 | 59 Nm | flywheel collar nut (LH thread) |
| MUTTER FUER PRIMAERRAD | M 20 x 1,5 | 98 Nm + Loctite 242 | nut for primary sprocket |
| MUTTER FUER KUPPLUNGSMITNEHMER | M 18 x 1,5 | 98 Nm + Loctite 242 | nut for inner clutch hub |
| MOTORGEHAEUSE - UND DECKELSCHRAUBEN | M 6 | 8 Nm | crankcase and cover bolts |
| SCHWINGARMBOLZEN | M 14 | 137 Nm | swing arm pivot |

# MOTORGEHAUSE / ENGINE CASE ▲ = NEUTEILE '91 / NEW PARTS '91

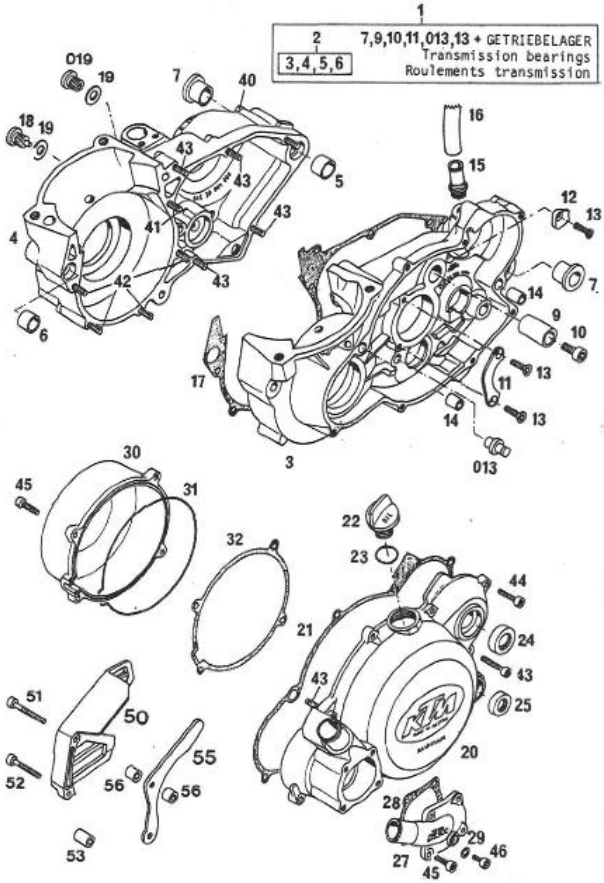


91–565.30.0

| BILD FIG. | TEILENUMMER PART NUMBER | STK. QTY. |
|---|---|---|
| 1 | 565.30.000.444 350/500 | 1 |
| 1 | 565.30.200.044 540 | 1 |
| 2 | 565.30.000.400 350/500 | 1 |
| 2 | 565.30.200.000 540 | 1 |
| 5 | 501.30.027.000 | 1 |
| 6 | 510.30.026.100 | 1 |
| 7 | 501.30.010.000 | 2 |
| 9 | 565.33.028.000 | 1 |
| 10 | 0912 080163 | 1 |
| 11 | 565.30.017.000 | 1 |
| 12 | 565.33.025.000 | 1 |
| 13 | 0991 060203 | 3 |
| 013 | 502.34.021.000 | 1 |
| 14 | 500.30.026.000 | 2 |
| 15 | 565.30.022.000 | 1 |
| 16 | 543.07.018.001 | 0,3 m |
| 17 | 565.30.039.000 | 1 |
| 18 | 580.38.020.000 | 1 |
| 19 | 580.38.022.000 | 2 |
| 019 | 0908 120153 | 1 |
| 20 | 565.30.001.300/90 | 1 |
| 21▲ | 565.30.025.375 | 1 |
| 22 | 543.30.020.000 | 1 |

| BILD FIG. | TEILENUMMER PART NUMBER | STK. QTY. |
|---|---|---|
| 23 | 0770 160030 | 1 |
| 24 | 0760 172870 | 1 |
| 25 | 0760 142460 | 1 |
| 27 | 565.35.001.300 | 1 |
| 28 | 565.35.003.300 | 1 |
| 29 | 0603 062101 | 1 |
| 30 | 565.30.002.100/90 | 1 |
| 31 | 565.30.002.150 | 1 |
| 32 | 555.30.002.150 | 1 |
| 40 | 0912 060753 | 1 |
| 41 | 0912 060653 | 1 |
| 42 | 0912 060503 | 4 |
| 43 | 0912 060303 | 6 |
| 44 | 0912 060253 | 7 |
| 45 | 0912 060203 | 8 |
| 46 | 0912 060103 | 1 |
| 50 | 545.30.060.000 | 1 |
| 51 | 0912 060453 | 1 |
| 52 | 0912 060403 | 1 |
| 53 | 565.30.060.050 | 2 |
| 55 | 545.30.047.014 15-Z | 1 |
| 55 | 545.30.047.013 14-Z | 1 |
| 56 | 545.30.047.000 | 4 |
| – | 565.30.100.000 | 1 |
| DICHTUNGSSATZ/GASKET SET | | |

# ZYLINDER 350 / CYLINDER

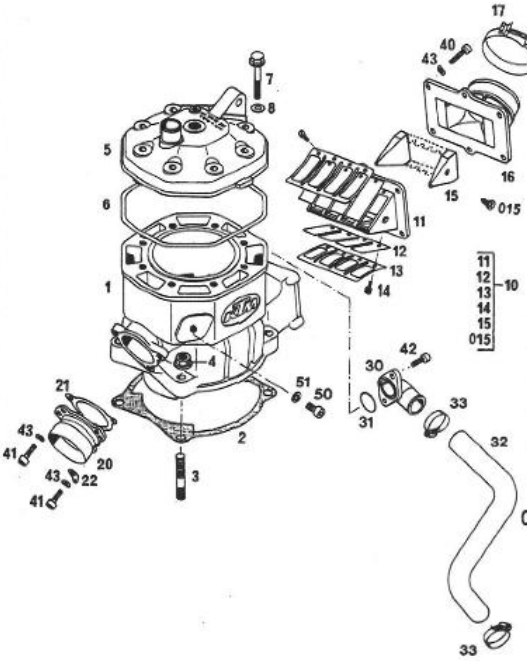

| BILD FIG. | TEILENUMMER PART NUMBER | | STK. QTY. |
|---|---|---|---|
| 1 | 555.30.005.300 | 350cc | 1 |
| 2 | 565.30.030.000 | 0,2mm | X |
| 2 | 565.30.030.100 | 0,3mm | X |
| 2 | 565.30.030.200 | 0,5mm | X |
| 3 | 0835 100451 | | 4 |
| 4 | 0331 100003 | | 4 |
| 5 | 555.30.006.300 | 350cc | 1 |
| 6 | 565.30.036.000 | | 1 |
| 7 | 565.30.079.000 | | 8 |
| 8 | 565.30.080.000 | | 8 |
| 10 | 555.30.051.044 | | 1 |
| 11 | 563.30.051.000 | | 1 |
| 12 | 563.30.052.000 | | 2 |
| 13 | 563.30.053.000 | | 2 |
| 14 | 0084 040083 | | 8 |
| 15 | 555.30.054.000 | | 1 |
| 015 | 0982 550133 | | 2 |

| BILD FIG. | TEILENUMMER PART NUMBER | | STK. QTY. |
|---|---|---|---|
| 16 | 565.30.050.000 | 350MX/ ENDURO | 1 |
| 17 | 565.30.061.000 | | 1 |
| 20 | 543.05.073.000 | | 1 |
| 21 | 544.30.046.000 | | 1 |
| 22 | 510.05.074.000 | | 1 |
| 30 | 565.35.006.000 | | 1 |
| 31 | 0770 020200 | | 1 |
| 32 | 565.35.227.000 | | 1 |
| 33 | 100.01.020.000 | | 2 |
| 40 | 0912 060253 | | 6 |
| 41 | 0912 060203 | | 3 |
| 42 | 0912 060163 | | 2 |
| 43 | 0137 060000 | | 9 |
| 50 | 0912 080103 | | 1 |
| 51 | 580.38.032.100 | | 1 |

89-555.30.3

X = NACH BEDARF/as required

# ZYLINDER 500/540 / CYLINDER

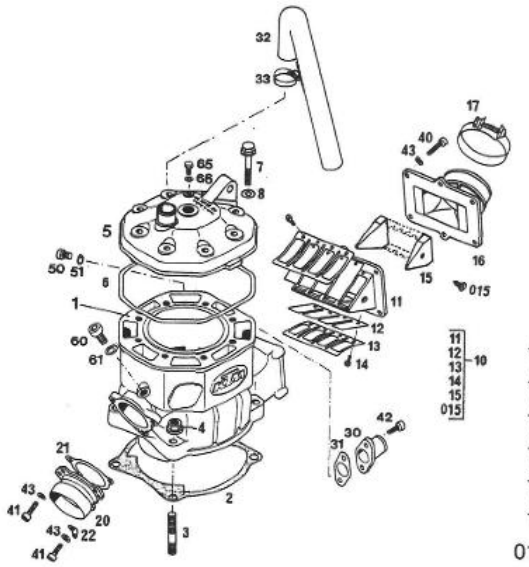

| BILD FIG. | TEILENUMMER PART NUMBER | | STK. QTY. |
|---|---|---|---|
| 1▲ | 565.30.005.400 | 500 cc | 1 |
| 1▲ | 565.30.205.100 | 540 cc | 1 |
| 2 | 565.30.030.000 | 0,2 mm | X |
| 2 | 565.30.030.100 | 0,3 mm | X |
| 2 | 565.30.030.200 | 0,5 mm | X |
| 3 | 0835 100451 | | 4 |
| 4 | 0331 100003 | | 4 |
| 5 | 565.30.006.300 | 500 cc | 1 |
| 5 | 565.30.206.000 | 540 cc | 1 |
| 6 | 565.30.036.000 | | 1 |
| 7 | 565.30.079.000 | | 8 |
| 8 | 565.30.080.000 | | 8 |
| 10 | 555.30.051.044 | | 1 |
| 11 | 563.30.051.000 | | 1 |
| 12 | 563.30.052.000 | | 2 |
| 13 | 563.30.053.000 | | 2 |
| 14 | 0084 040083 | | 8 |
| 15 | 555.30.054.000 | | 1 |
| 015 | 0982 550133 | | 2 |
| 16 | 565.30.050.300 | 500 MX<br>540 D-XC | 1 |

| BILD. FIG. | TEILENUMMER PART NUMBER | | STK. QTY. |
|---|---|---|---|
| 17 | 565.30.061.000 | | 1 |
| 20 | 543.05.073.000 | | 1 |
| 21 | 544.30.046.000 | | 1 |
| 22 | 510.05.074.000 | | 1 |
| 30 | 580.35.010.000 | | 1 |
| 31 | 580.35.037.000 | | 1 |
| 32 | 544.35.025.000 | | 1 |
| 33 | 100.01.020.000 | | 2 |
| 40 | 0912 060253 | | 6 |
| 41 | 0912 060203 | | 3 |
| 42 | 0912 060163 | | 2 |
| 43 | 0137 060000 | | 9 |
| 50 | 0912 080103 | | 1 |
| 51 | 580.38.032.100 | | 1 |
| 60 | 0984 100163 | | 1 |
| 61 | 580.38.032.010 | 1mm | X |
| 61 | 580.38.032.030 | 3mm | X |
| 65 | 0933060103 | | 1 |
| 66 | 580.36.065.000 | | 1 |

X = NACH BEDARF / AS REQUIRED

91-565.30.2

# KURBELTRIEB, KOLBEN / CRANKSHAFT, PISTON

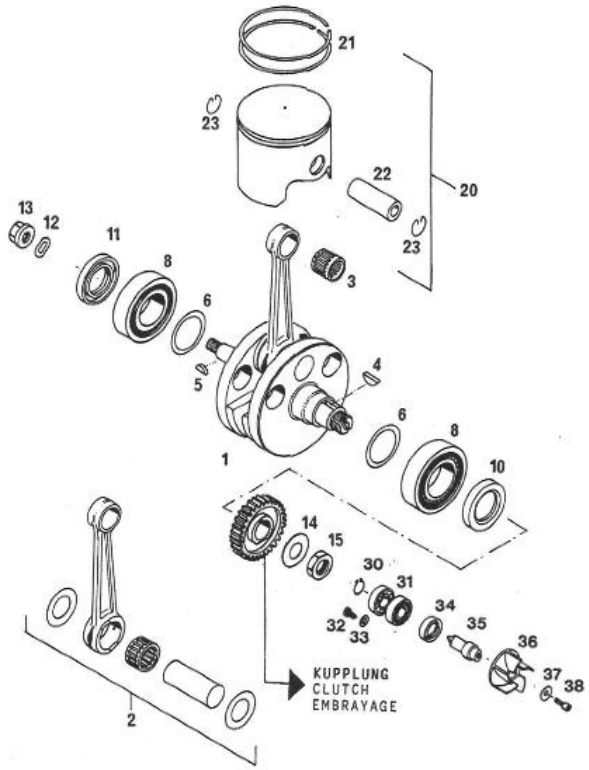


| BILD FIG. | TEILENUMMER PART NUMBER | | STK. QTY. |
|---|---|---|---|
| 1 | 555.30.018.300 | 350 | 1 |
| 1 | 565.30.018.500 | 500 | 1 |
| 1 | 565.30.218.000 | 540 | 1 |
| 2 | 565.30.215.044 | 350-540 | 1 |
| 3 | 565.30.234.000 | 350-540 | 1 |
| 4 | 0888 050650 | | 1 |
| 5 | 0888 030050 | | 1 |
| 6 | 565.30.081.000 | 0,10 mm | X |
| 6 | 565.30.081.100 | 0,15 mm | X |
| 6 | 565.30.081.400 | 0,50 mm | X |
| 8 | 565.30.123.000 | | 2 |
| 10 | 0760 325271 | | 1 |
| 11 | 0760 305272 | | 1 |
| 12 | 0137 120000 | | 1 |
| 13 | 510.30.028.100 | | 1 |
| 14 | 560.30.048.000 | | 1 |
| 15 | 0936 200155 | | 1 |
| 20 | 555.30.007.000 | 350 | 1 |
| 20 | 565.30.007.000 | 500 | 1 |
| 20 | 565.30.207.000 | 540 | 1 |
| 21 | 555.30.032.000 | 350 | 2 |
| 21 | 565.30.032.000 | 500 | 2 |
| 21 | 563.30.032.002 | 540 | 2 |

| BILD FIG. | TEILENUMMER PART NUMBER | | STK. QTY. |
|---|---|---|---|
| 22 | 555.30.033.000 | 350 | 1 |
| 22 | 563.30.033.000 | 500/540 | 1 |
| 23 | 563.30.074.000 | | 2 |
| 30 | 0471 120010 | | 1 |
| 31 | 0625 060016 | | 2 |
| 32 | 0084 040063 | | 1 |
| 33 | 0125 050003 | | 1 |
| 34 | 0760 152472 | | 1 |
| 35 | 544.35.010.000 | | 1 |
| 36 | 565.35.005.300 | | 1 |
| 37 | 0021 050003 | | 1 |
| 38 | 0912 050123 | | 1 |

90-555.30.2

X = NACH BEDARF/as required

# VERGASER / CARBURETTOR PHBE 38 350 MX / ENDURO

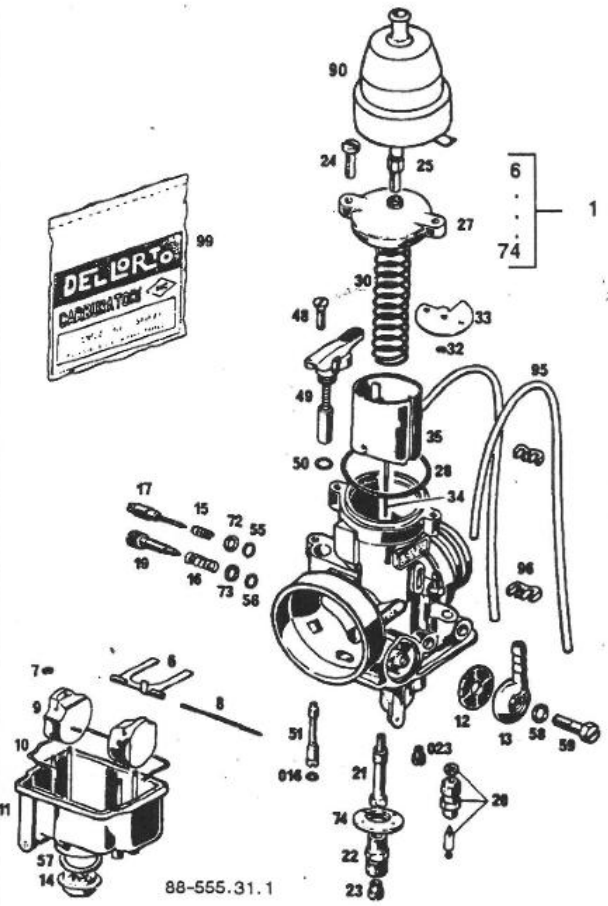


88-555.31.1

| BILD FIG. | TEILENUMMER PART NUMBER | STK. QTY. |
|---|---|---|
| 1 | 555.31.501.144 | 1 |
| 6 | 501.31.106.000 | 1 |
| 7 | 0799 025000 | 2 |
| 8 | 570.31.508.000 | 1 |
| 9 | 501.31.109.000 | 1 |
| 10 | 570.31.510.000 | 1 |
| 11 | 565.31.511.000 | 1 |
| 12 | 151.31.112.000 | 1 |
| 13 | 570.31.513.000 | 1 |
| 14 | 570.31.514.000 | 1 |
| 15 | 570.31.515.000 | 1 |
| 16 | 520.31.116.000 | 1 |
| 016 | 510.31.116.100 | 1 |
| 17 | 570.31.517.000 | 1 |
| 19 | 570.31.519.000 | 1 |
| 20 | 572.31.120.300 | 1 |
| 21 | 570.31.521.270 | 1 |
| 22 | 570.31.522.000 | 1 |
| 23 | 570.31.523.200 | 1 |
| 023 | 151.31.523.065 | 1 |
| 023 | 151.31.123.070 | X |
| 24 | 570.31.524.000 | 1 |
| 25 | 570.31.525.100 | 1 |
| 27 | 501.31.127.000 | 1 |
| 28 | 570.31.528.000 | |

| BILD FIG. | TEILENUMMER PART NUMBER | STK. QTY. |
|---|---|---|
| 30 | 544.31.530.000 | 1 |
| 32 | 0799 025055 | 1 |
| 33 | 544.31.532.000 | 1 |
| 34 | 555.31.534.000 | 1 |
| 35 | 544.31.535.000/40 | 1 |
| 48 | 0963 045143 | 1 |
| 49 | 501.31.149.000 | 1 |
| 50 | 0770 080010 | 1 |
| 51 | 570.31.551.070 | 1 |
| 55 | 0770 020040 | 1 |
| 56 | 0770 020080 | 1 |
| 57 | 0603 202701 | 1 |
| 58 | 0603 061001 | 1 |
| 59 | 0933 060163 | 1 |
| 72 | 570.31.572.000 | 1 |
| 73 | 570.31.573.000 | 1 |
| 74 | 501.31.174.000 | 1 |
| 90 | 490.31.138.000 | 1 |
| 95 | 501.31.137.000 | 2 |
| 96 | 830.13.096.000 | 2 |
| 99 | 501.31.199.000 | 1 |

# VERGASER / CARBURETTOR VHSB 38 500/540 '91

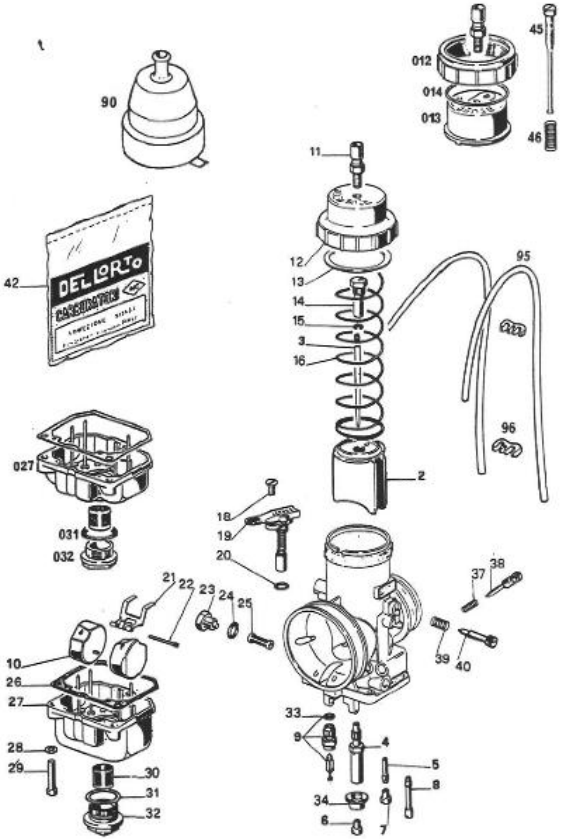


91-565.31.0

| BILD FIG. | TEILENUMMER PART NUMBER | STK. QTY. |
|---|---|---|
| 1-41 | 565.31.501.544 | 1 |
| 2 | 502.31.135.040 | 1 |
| 3 | 490.31.134.046 | 1 |
| 4 | 545.31.521.268 | 1 |
| 5 | 490.31.122.000 | 1 |
| 6 | 570.31.523.190 | 1 |
| 7 | 151.31.123.050 | 1 |
| 8 | 490.31.151.060 | 1 |
| 9 | 572.31.120.350 | 1 |
| 10 | 545.31.509.000 | 2 |
| 11 | 570.31.525.100 | 1 |
| 12 | 502.31.127.000 | 1 |
| 012 | 490.31.227.000 | X |
| 013 | 490.31.127.000 | X |
| 14 | 490.31.131.000 | 1 |
| 15 | 0799025055 | 1 |
| 16 | 490.31.130.000 | 1 |
| 18 | 0963045103 | 1 |
| 19 | 490.31.149.000 | 1 |
| 21 | 490.31.106.000 | 1 |
| 22 | 490.31.108.100 | 1 |
| 23 | 491.31.513.100 | 1 |
| 25 | 490.31.212.100 | 1 |

| BILD FIG. | TEILENUMMER PART NUMBER | STK. QTY. |
|---|---|---|
| 27 | 502.31.111.000 | 1 |
| 027 | 490.31.111.000 | X |
| 28 | 0127050003 | 3 |
| 29 | 0084050203 | 3 |
| 30 | 490.31.112.000 | 1 |
| 32 | 502.31.114.000 | 1 |
| 032 | 490.31.114.000 | X |
| 34 | 545.31.574.000 | 1 |
| 37 | 570.31.515.000 | 1 |
| 38 | 490.31.117.000 | 1 |
| 39 | 502.31.150.000 | 1 |
| 40 | 502.31.120.000 | 1 |
| 42 | 545.31.599.000 | X |
| | VHSB 38 AD | |
| | Fig. 014, 20, 24, 26, 031, 33, 35 | |
| 42 | 545.31.599.100 | 1 |
| | VHSB 38 DD | |
| | Fig. 13, 20, 24, 26, 31, 33, 35 | |
| 45 | 490.31.119.200 | X |
| 46 | 490.31.116.000 | X |
| 90 | 490.31.138.000 | 1 |
| 95 | 501.31.137.000 | 2 |
| 96 | 830.13.096.000 | 2 |

# ZÜNDANLAGE ENDURO / IGNITION SYSTEM MOTOPLAT 500 MX

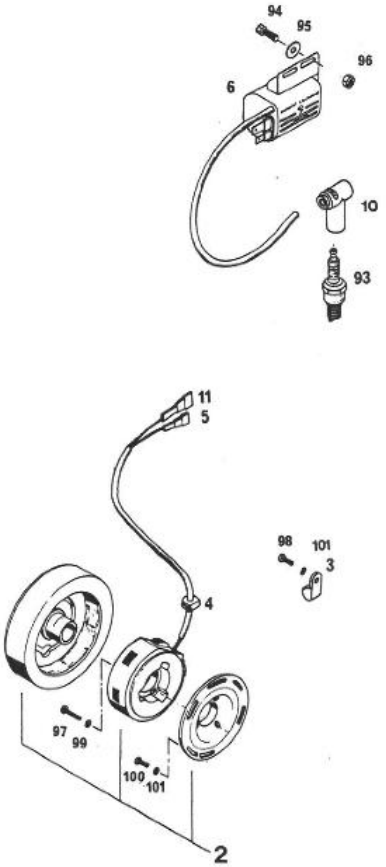


| BILD FIG. | TEILENUMMER PART NUMBER | | STK. QTY. |
|---|---|---|---|
| 2 | 560.31.002.000 | 176-1 | 1 |
| 3 | 570.13.070.100 | | 1 |
| 4 | 510.31.004.000 | | 1 |
| 5 | 510.31.005.000 | | 1 |
| 6 | 510.31.006.200 | | 1 |
| 10 | 510.31.010.100 | | 1 |
| 11 | 510.31.011.000 | | 1 |
| 93 | 565.31.093.002 | W2CC | 1 |
| 94 | 0933 060163 | | 2 |
| 95 | 0021 060003 | | 2 |
| 96 | 0985 060003 | | 2 |
| 97 | 0085 040203 | | 3 |
| 98 | 0084 050123 | | 1 |
| 99 | 0137 040003 | | 3 |
| 100 | 0084 050123 | | 3 |
| 101 | 0125 050003 | | 4 |

## ZÜNDANLAGE ENDURO / IGNITION SYSTEM SEM 350/540

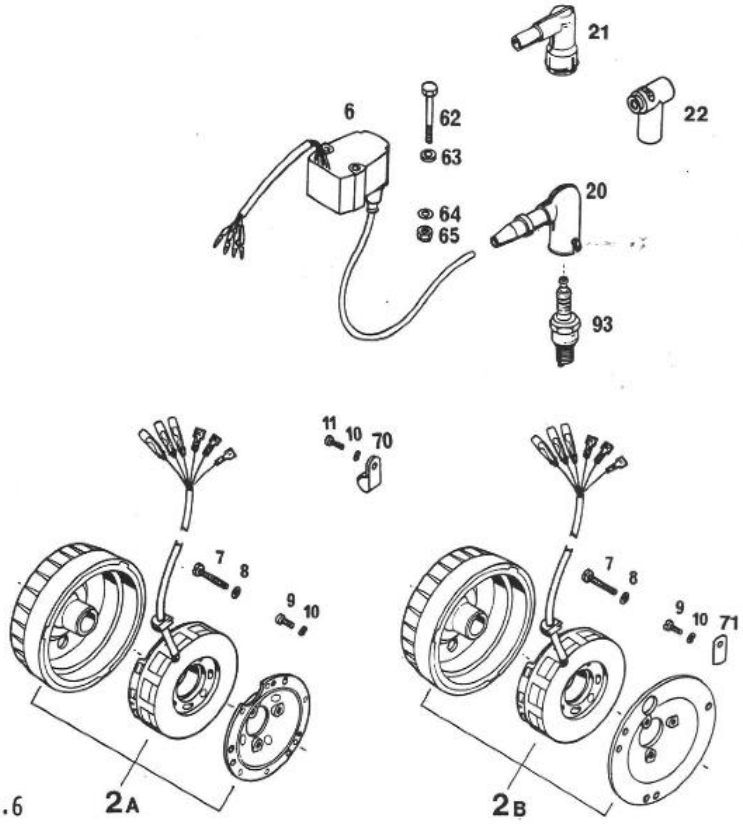


90-555.31.6

| BILD FIG. | TEILENUMMER PART NUMBER | | STK. QTY. |
|---|---|---|---|
| 2A | 530.31.502.000 | 350 | 1 |
| 2B | 545.31.602.000 | 540D-XC | 1 |
| 6 | 545.31.006.000 | 350 | 1 |
| 6 | 545.31.606.000 | 540D-XC | 1 |
| 7 | 0085 050303 | | 3 |
| 8 | 0125 050003 | | 3 |
| 9 | 0084 050123 | | 3 |
| 10 | 0125 050003 | | 4 |
| 11 | 0084 050123 | | 1 |
| 20 | 510.31.010.200 | | 1 |
| 21 | 510.31.010.300 | GS-F | 1 |
| 22 | 545.31.010.000 | | 1 |
| 62 | 0931 060453 | | 2 |
| 63 | 120.11.016.000 | | 2 |
| 64 | 0125 060003 | | 2 |
| 65 | 0985 060003 | | 2 |
| 70 | 570.13.070.000 | | 2 |
| 71 | 500.31.003.000 | | 1 |
| 93 | 560.31.093.310 | W2CS 350cc | 1 |
| 93 | 560.31.093.340 | W08CS 540cc | 1 |

## KICKSTARTER

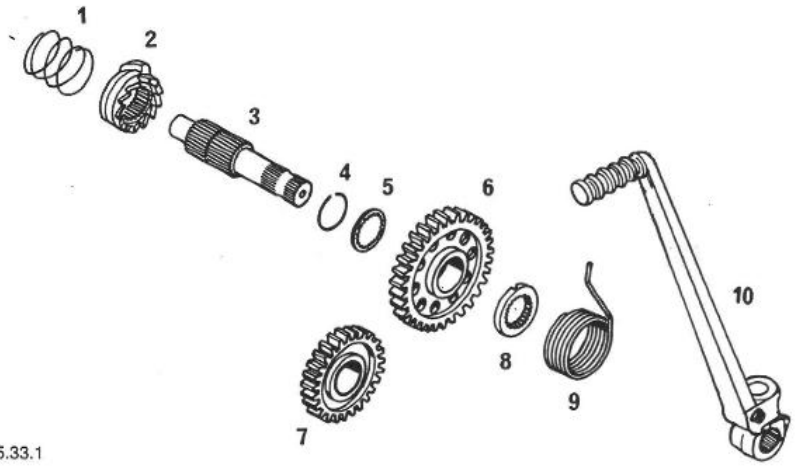


87-555.33.1

| BILD FIG. | TEILENUMMER PART NUMBER | STK. QTY. |
|---|---|---|
| 1 | 565.33.027.000 | 1 |
| 2 | 565.33.023.000 | 1 |
| 3 | 565.33.021.000 | 1 |
| 4 | 501.33.090.000 | 1 |
| 5 | 501.33.015.000 | 1 |
| 6 | 565.33.022.000 | 1 |
| 7 | 565.33.024.000 | 1 |
| 8 | 565.33.026.000 | 1 |
| 9 | 565.33.020.500 | 1 |
| 10 | 565.33.036.244 | 1 |

# KUPPLUNG / CLUTCH

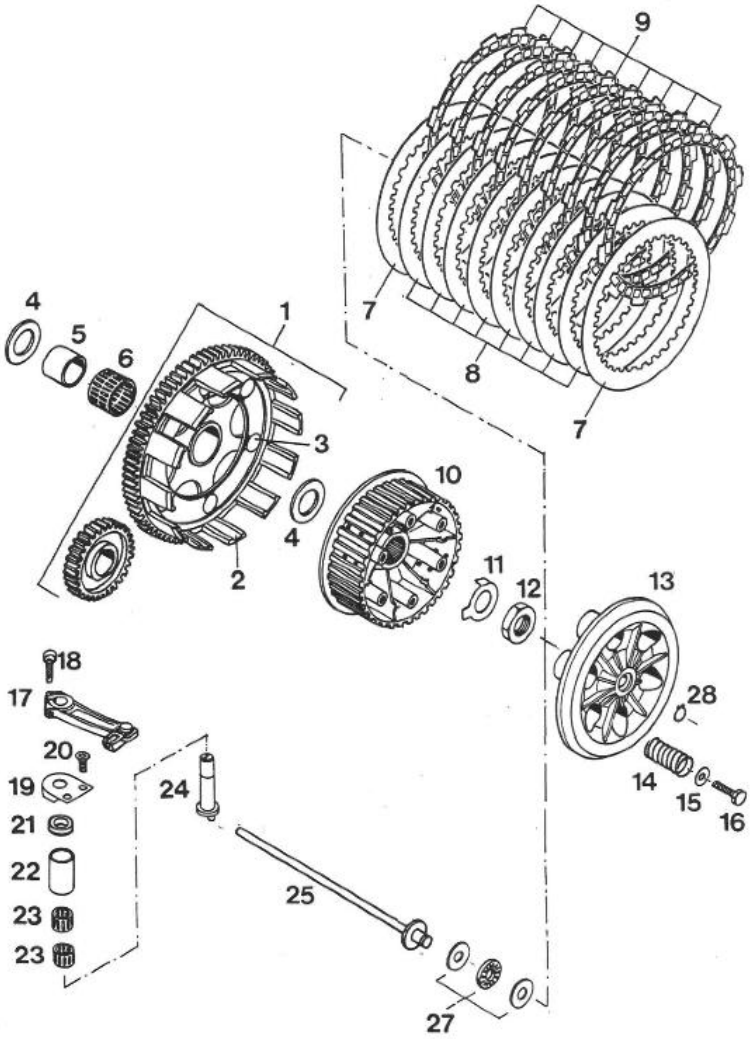


90-555.32.1

| BILD FIG. | TEILENUMMER PART NUMBER | | STK. QTY. |
|---|---|---|---|
| 1 | 565.32.101.344 | | 1 |
| 2 | 580.32.001.000 | | 1 |
| 3 | 580.32.007.000 | | 6 |
| 4 | 565.32.012.000 | | 2 |
| 5 | 565.32.096.000 | | 1 |
| 6 | 565.32.095.000 | | 1 |
| 7 | 580.32.012.500 | 2,0 mm | 2 |
| 8 | 580.32.012.000 | 1,0 mm | 8 |
| 9 | 565.32.011.300 | Sinter | 9 |
| 10 | 565.32.002.100 | 350/500 | 1 |
| 10 | 565.32.002.400 | 540 | 1 |
| 11 | 565.32.018.000 | | 1 |
| 12 | 0936 181505 | | 1 |
| 13 | 565.32.003.500 | | 1 |
| 14 | 543.32.001.000 | 350/500 2,5 mm | 6 |
| 14 | 544.32.001.100 | 540 2,7 mm | 6 |
| 15 | 0021 060003 | | 6 |
| 16 | 0933 060203 | | 6 |
| 17 | 545.32.014.000 | | 1 |
| 18 | 0912 060203 | | 1 |
| 19 | 545.32.013.000 | | 1 |
| 20 | 0991 060122 | | 2 |
| 21 | 545.32.093.000 | | 1 |
| 22 | 545.32.091.000 | | 1 |
| 23 | 545.32.090.000 | | 2 |
| 24 | 545.32.015.100 | | 1 |
| 25 | 565.32.017.500 | | 1 |
| 27 | 543.32.030.000 | | 1 |
| 28 | 0471 100010 | | 1 |

# GETRIEBE I / TRANSMISSION I

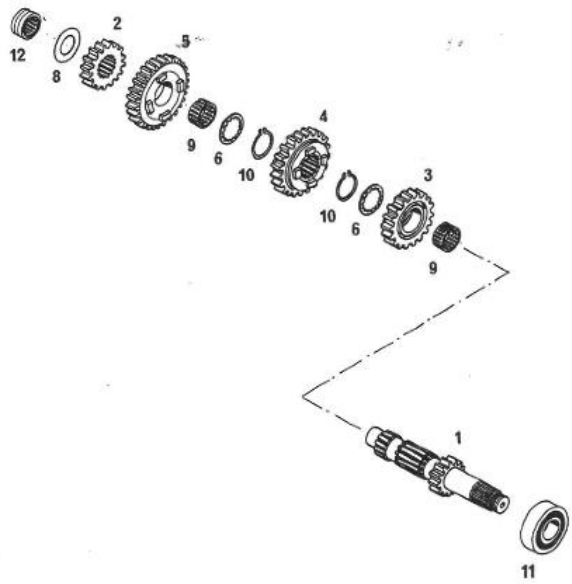


87-565.33.2

| BILD FIG. | TEILENUMMER PART NUMBER | | STK. QTY. |
|---|---|---|---|
| 1 | 565.33.002.300 | | 1 |
| 2 | 565.33.010.300 (5-GANG/5-Speed) | 15-Z | 1 |
| 2 | 565.33.110.400 (4-GANG/4-Speed) | 16-Z | 1 |
| 3 | 565.33.004.300 | | 1 |
| 4 | 565.33.006.300 | | 1 |
| 5 | 565.33.008.300 | | 1 |
| 6 | 565.33.016.300 | | 2 |
| 8 | 565.33.015.000 | | 1 |
| 9 | 565.33.099.000 | | 2 |
| 10 | 520.33.096.000 | | 2 |
| 11 | 0625 201029 | | 1 |
| 12 | 565.33.093.000 | | 1 |

# GETRIEBE II / TRANSMISSION II

| BILD FIG. | TEILENUMMER PART NUMBER | STK. QTY. |
|---|---|---|
| 0 | 565.33.019.000 (4-GANG/4-Speed) | 1 |
| 1 | 565.33.005.300 (5-GANG/5-Speed) | 1 |
| 2 | 565.33.013.300 (f. Gegenrad/counter gear 565.33.010.300) | 1 |
| 2 | 565.33.013.400 (f. Gegenrad/counter gear 565.33.110.400) | 1 |
| 3 | 565.33.007.300 | 1 |
| 4 | 565.33.009.300 | 1 |
| 5 | 565.33.011.300 21-Z | 1 |
| 5 | 565.33.111.300 540 D-XC 20-Z | 1 |
| 7 | 500.33.001.000 | 1 |
| 8 | 565.33.015.000 | 1 |
| 9 | 565.33.018.300 (5-GANG/5-Speed) 22.2x35x1.5 | 1 |
| 10 | 565.33.016.300 | 1 |
| 12 | 520.33.096.000 | 4 |
| 15 | 565.33.099.000 | 2 |
| 015 | 565.33.098.000 (5-GANG/5-Speed) | 1 |
| 16 | 565.33.093.000 | 1 |
| 17 | 0625 062059 | 1 |
| 18 | 560.33.020.000 | 1 |
| 19 | 0770 020220 | 1 |
| 20 | 501.33.018.000 | 1 |
| 21 | 0760 324771 | 1 |
| 22 | 500.33.029.014 14-ZAEHNE/ Teeth | 1 |
| 22 | 500.33.029.013 13-ZAEHNE/ Teeth | X |

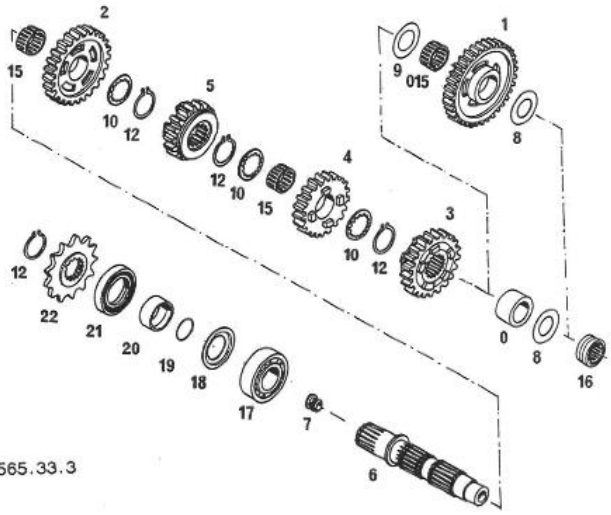


87-565.33.3

X = NACH BEDARF/as required

# KUEHLSYSTEM 350 / COOLING SYSTEM

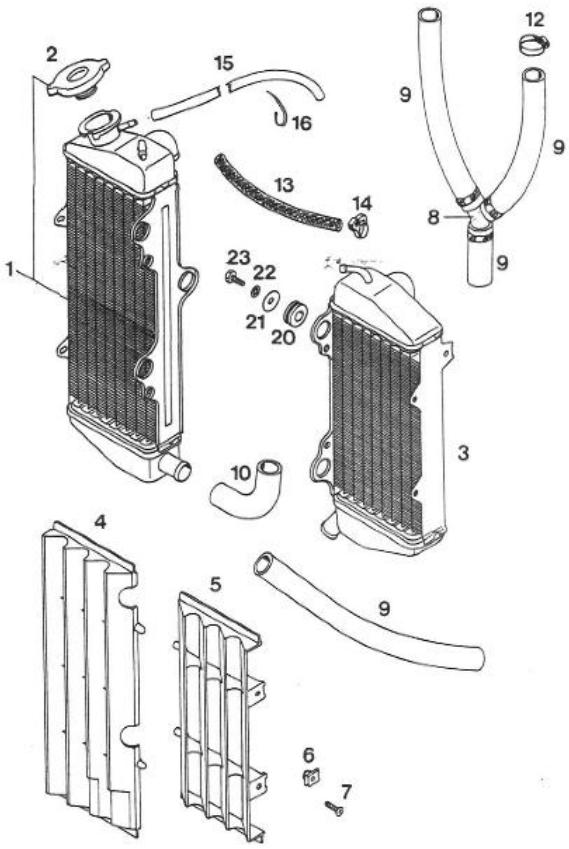


| BILD FIG. | TEILENUMMER PART NUMBER | STK. QTY. |
|---|---|---|
| 1 | 545.35.008.000 | 1 |
| 2 | 490.35.016.000 | 1 |
| 3 | 545.35.007.000 | 1 |
| 4 | 545.35.134.000 | 1 |
| 5 | 545.35.034.000 | 1 |
| 6 | 502.35.033.000 | 4 |
| 7 | 0966 050203 | 4 |
| 8 | 565.35.026.000 | 1 |
| 9 | 565.35.025.001 | 0,75 m |
| 10 | 565.35.027.000 | 1 |
| 12 | 100.01.020.000 | 10 |
| 13 | 544.35.024.001 | 0,18 m |
| 14 | 544.35.023.100 | 2 |
| 15 | 550.07.016.001 | 0,45 m |
| 16 | 440.11.076.155 | X |
| 20 | 410.01.052.000 | 6 |
| 21 | 510.06.097.000 | 6 |
| 22 | 0797 060003 | 6 |
| 23 | 0933 060163 | 6 |

89-555.35.1

X = NACH BEDARF / as required

# KUEHLSYSTEM 500/540 / COOLING SYSTEM

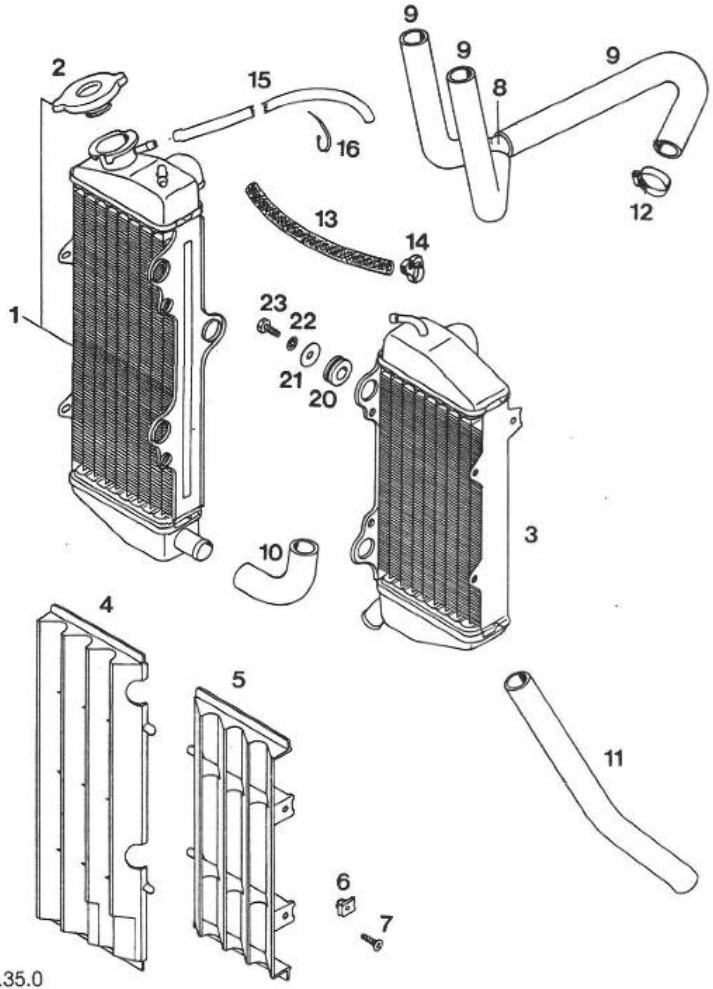


91-565.35.0

| BILD FIG. | TEILENUMMER PART NUMBER | STK. QTY. |
|---|---|---|
| 1 | 545.35.008.000 | 1 |
| 2 | 490.35.016.000 | 1 |
| 3 | 545.35.007.000 | 1 |
| 4 | 545.35.134.000 | 1 |
| 5 | 545.35.034.000 | 1 |
| 6 | 502.35.033.000 | 4 |
| 7 | 0966 050203 | 4 |
| 8 | 565.35.026.000 | 1 |
| 9 | 544.35.025.000 | 3 |
| 10 | 565.35.027.000 | 1 |
| 11 | 565.35.025.000 | 1 |
| 12 | 100.01.020.000 | 10 |
| 13 | 544.35.024.001 | 0,18 m |
| 14 | 544.35.023.100 | 2 |
| 15 | 555.07.016.001 | 0,45 m |
| 16 | 440.11.076.155 | X |
| 20 | 410.01.052.000 | 6 |
| 21 | 510.06.097.000 | 6 |
| 22 | 0797 060003 | 6 |
| 23 | 0933 060163 | 6 |

X = NACH BEDARD / AS REQUIRED

KONSTRUKTIONS- U. AUSFÜHRUNGSÄNDERUNGEN VORBEHALTEN / ALL RIGHTS RESERVED TO MAKE ALTERATIONS TO DESIGN AND MODEL

## SCHALTUNG / SHIFTING MECHANISM

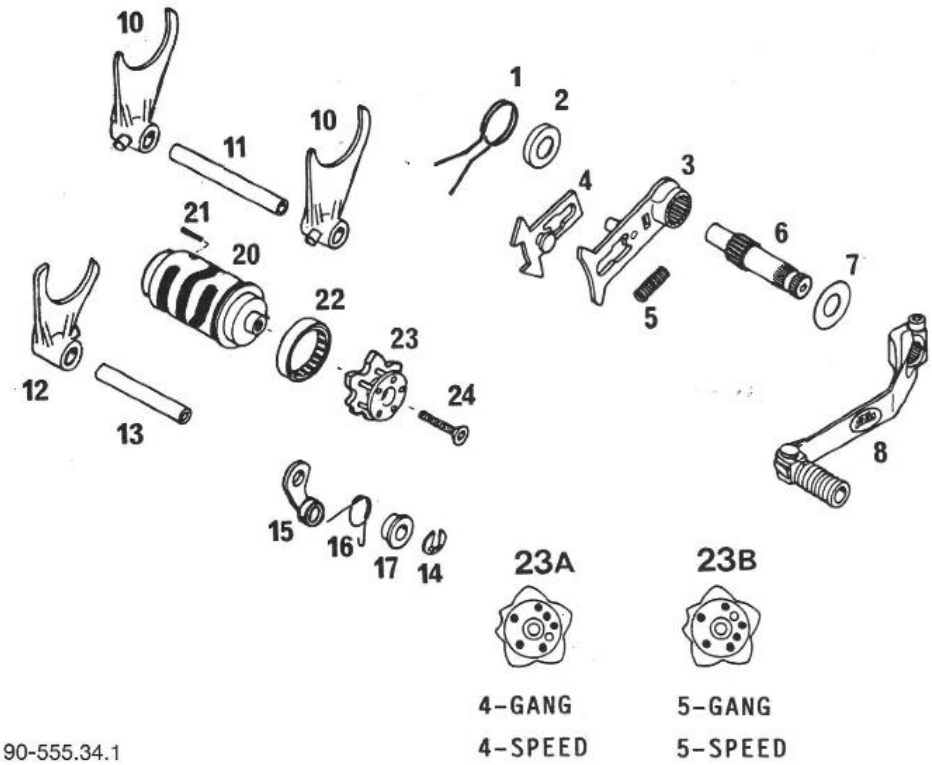


90-555.34.1

| BILD FIG. | TEILENUMMER PART NUMBER | STK. QTY. |
|---|---|---|
| 1 | 565.34.014.200 | 1 |
| 2 | 565.34.020.000 | 1 |
| 3 | 565.34.007.200 | 1 |
| 4 | 565.34.008.200 | 1 |
| 5 | 565.34.013.100 | 1 |
| 6 | 565.34.005.100 | 1 |
| 7 | 565.30.026.100 | 1 |
| 8 | 565.34.022.000 | 1 |
| 10 | 580.34.002.100 | 2 |
| 11 | 565.34.004.300 | 1 |
| 12 | 580.34.001.100 | 1 |
| 13 | 565.34.003.300 | 1 |
| 14 | 0799 080000 | 1 |
| 15 | 490.34.024.044 | 1 |
| 16 | 565.34.023.000 | 1 |
| 17 | 502.34.020.000 | 1 |
| 20 | 565.34.012.300 | 1 |
| 21 | 0481 030180 (4-GANG/4-Speed) | 1 |
| 22 | 501.34.026.000 | 1 |
| 23A | 565.34.015.344 (4-GANG/4-Speed) | 1 |
| 23B | 565.34.115.344 (5-GANG/5-Speed) | 1 |
| 24 | 565.34.016.000 | 1 |

## SPEZIALWERKZEUGE / SPECIAL TOOLS

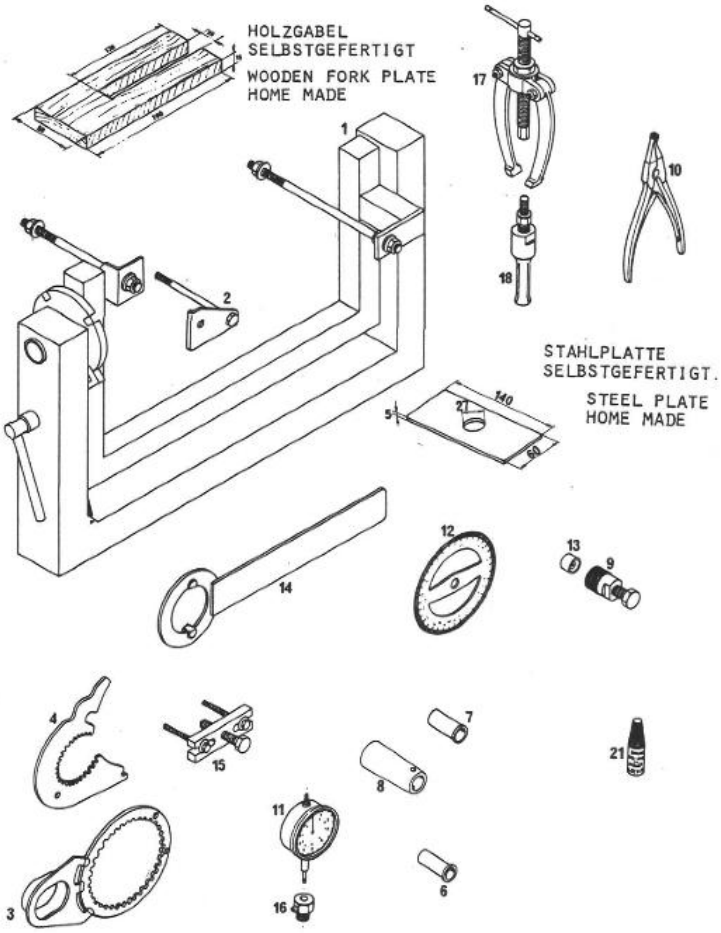


90-555.29.1

| BILD FIG. | TEILENUMMER PART NUMBER | | STK. QTY. |
|---|---|---|---|
| 1 | 560.12.001.000 | | 1 |
| 2 | 565.12.001.050 | | 1 |
| 3 | 580.12.003.000 | | 1 |
| 4 | 565.12.004.000 | | 1 |
| 6 | 565.12.005.014 | D-14 | 1 |
| 7 | 565.12.005.017 | D-17 | 1 |
| 8 | 565.12.005.032 | D-32 | 1 |
| 9 | 6 276 807 | | 1 |
| 10 | 510.12.011.000 | | 1 |
| 11 | 501.12.013.000 | | 1 |
| 12 | 510.12.014.000 | | 1 |
| 13 | 510.12.016.000 | | 1 |
| 14 | 544.12.012.000 | | 1 |
| 15 | 580.12.021.000 | | 1 |
| 16 | 501.12.030.000 | | 1 |
| 17 | 151.12.017.000 | | 1 |
| 18 | 151.12.018.100 | | 1 |
| 21 | 6 899 785 Loctite blue 242 | 6 ccm | X |

X = NACH BEDARF/as required